ADVANCED AEROBATICS

Geza Szurovy

Mike Goulian
1995 U.S. AEROBATIC CHAMPION

Szurovy
Goulian
ADVANCED AEROBATICS

Advanced Aerobatics

Other books by Geza Szurovy

Basic Aerobatics by Geza Szurovy and Mike Goulian
Cutting the Cost of Flying
Fly for Less
Learjets by Geza Szurovy (Motorbooks International)
Profitable Photography, Start and Run a Moneymaking Business
Renting and Flying Airplanes Worldwide

Other books in the PRACTICAL FLYING SERIES

Handling In-Flight Emergencies by Jerry A. Eichenberger
Cockpit Resource Management: The Private Pilot's Guide by Thomas P. Turner
The Pilot's Guide to Weather Reports, Forecasts, and Flight Planning 2nd Edition by Terry T. Lankford
Weather Patterns and Phenomena: A Pilot's Guide by Thomas P. Turner
Cross-Country Flying by Jerry A. Eichenberger
Avoiding Mid-Air Collisions by Shari Stamford Krause, Ph.D.
Flying in Adverse Conditions by R. Randall Padfield
Mastering Instrument Flying 2nd Edition by Henry Sollman with Sherwood Harris
Pilot's Avionics Survival Guide by Edward R. Maher
The Pilot's Air Traffic Control Handbook 2nd Edition by Paul E. Illman
Advanced Aircraft Systems by David Lombardo
The Pilot's Radio Communications Handbook 4th Edition by Paul E. Illman
Night Flying by Richard F. Haines and Courtney L. Flatau
Bush Flying by Steven Levi and Jim O'Meara
Understanding Aeronautical Charts 2nd Edition by Terry T. Lankford
Aviator's Guide to Navigation 3rd Edition by Donald J. Clausing
Learning to Fly Helicopters by R. Randall Padfield
ABC's of Safe Flying 3rd Edition by J.R. Williams
Flying VFR in Marginal Weather 3rd Edition by R. Randall Padfield
The Aviator's Guide to Flight Planning by Donald J. Clausing
Better Takeoffs and Landings by Michael C. Love
Aviator's Guide to GPS 2nd Edition by Bill Clarke

Aircraft Technical Books, LLC
(970) 726-5111
http://www.ACTechBooks.com

Advanced Aerobatics

Geza Szurovy
Michael Goulian

McGraw-Hill
New York San Francisco Washington, D.C. Auckland Bogotá
Caracas Lisbon London Madrid Mexico City Milan
Montreal New Delhi San Juan Singapore
Sydney Tokyo Toronto

Library of Congress Cataloging-in-Publication Data
Szurovy, Geza, date.
Advanced aerobatics / Geza Szurovy, Mike Goulian.
p. cm.
Includes index.
ISBN 0-07-063302-9 (pbk.).—ISBN 0-07-063303-7 (hard)
1. Stunt flying. I. Goulian, Mike. II. Title.
TL711.S8S9798 1996
797.5'4—dc20 96-18009
CIP

McGraw-Hill
A Division of The McGraw-Hill Companies

10 QSR/QSR 0 9 8

ISBN-13: 978-0-07-063302-5 (PBK)
ISBN-10: 0-07-063302-9 (PBK)
ISBN-13: 978-0-07-063303-2 (HC)
ISBN-10: 0-07-063303-7 (HC)

The sponsoring editor for this book was Shelley Chevalier, and the production supervisor was Suzanne Rapcavage. It was set in Palatino Roman by Jana Fisher through the services of Barry E. Brown (Broker—Editing, Design and Production). Unless otherwise noted, photography by Geza Szurovy.

Printed and bound by Quebecor Dubuque.

McGraw-Hill books are available at special quantity discounts to use as premiums and sales promotions, or for use in corporate training programs. For more information, please write to the Director of Special Sales, Professional Publishing, McGraw-Hill, Two Penn Plaza, New York, NY 10121-2298. Or contact your local bookstore.

This book is printed on recycled, acid-free paper containing a minimum of 50 percent recycled, de-inked fiber.

For Rick Massegee
in loving memory

DISCLAIMER

All material in this book should be used as a source of general information only. It is the responsibility of every pilot intending to learn aerobatics to receive appropriate comprehensive dual aerobatic instruction from a qualified aerobatic instructor and comply with all regulations and procedures in effect. It is the responsibility of the pilot in command to consult all official sources of information relevant to every aspect of a proposed flight and personally assure compliance with all laws, regulations, and procedures.

Aircraft Technical Books, LLC
(970) 726-5111
http://www.ACTechBooks.com

Contents

Aircraft Technical Books, LLC
(970) 726-5111
http://www.ACTechBooks.com

Acknowledgments

Advanced aerobatics is intensely competitive, but everyone in the sport to whom we turned for advice responded with an extraordinary level of generosity and encouragement. We would particularly like to thank those colleagues of Mike Goulian who spent a considerable amount of time offering their insightful opinions on the many nuances of advanced aerobatics formed over many years on the competition and airshow circuits. Leo Loudenslager, Patty Wagstaff, Linda Meyers Morrissey, John Morrissey, Phil Knight, Diana Hakala, Randy Gagne, Sergei Boriak, and Xavier de L'Apparent all set aside other commitments without hesitation to help us out.

We would also like to thank Ed Jepsen, who generously lent us his Extra 300 for the in-cockpit photography, Ron Burns for his comments and observations, Tom Hughes for the Sukhoi and Extra graphics, and Shelley Chevalier and Susan Kagey, our editors at McGraw-Hill, for their efforts on our behalf.

Last, a very special thanks to our respective families, Rita and Myron Goulian and Anne Mendenhall, for their remarkable patience and unconditional support for our need to fly.

Geza Szurovy and Mike Goulian
Hanscom Field, Massachusetts

Acknowledgments

Advanced aerobatics is intensely competitive, but everyone in the sport to whom we turned for advice responded with an extraordinary level of generosity and encouragement. We would particularly like to thank those colleagues of Mike Goulian who spent a considerable amount of time offering their insightful opinions on the many nuances of advanced aerobatics formed over many years on the competition and airshow circuits. Leo Loudenslager, Patty Wagstaff, Linda Meyers Morrissey, John Morrissey, Phil Knight, Diana Hakala, Randy Gagne, Sergei Boriak, and Xavier de L'Apparent all set aside other commitments without hesitation to help us out.

We would also like to thank Ed Jepsen, who generously lent us his Extra 300 for the in-cockpit photography, Ron Burns for his comments and observations, Tom Hughes for the Sukhoi and Extra graphics, and Shelley Chevalier and Susan Kagey, our editors at McGraw-Hill, for their efforts on our behalf.

Last, a very special thanks to our respective families, Rita and Myron Goulian and Anne Mendenhall, for their remarkable patience and unconditional support for our need to fly.

Geza Szurovy and Mike Goulian
Hanscom Field, Massachusetts

Aircraft Technical Books, LLC
(970) 726-5111
http://www.ACTechBooks.com

Introduction

The ideal flight crew in the highly automated 21st-century jet's cockpit is said to be a dog and a pilot. The dog is there to bite the pilot if he or she tries to touch anything. The pilot is there to feed the dog. This assertion might be only half tongue-in-cheek at a time when you can fly a Boeing 747 from New York to Tokyo without once touching the controls until you are rolling out on the runway after landing at your destination. It also neatly sums up why so many pilots who want their flying to be truly exciting take up aerobatics.

Pitching your skills against the elements in a DC-3 flying across the Himalayas in instrument conditions using only a compass and a clock to find your way is history. But the adrenaline rush of a snap roll on a vertical down line at full power can be had by all who seek to push their flying skills to the limit instead of passively monitoring computer systems that do the flying for them. If you are the kind of person who takes on the challenge of aerobatics, you are also likely to persevere to the limits of your skills. Our goal is to help you reach those limits.

This volume is a sequel to *Basic Aerobatics* (McGraw-Hill 1994), our first book on the sport. Learning basic aerobatics might initially have been the most demanding task of your flying career. At first the learning curve was steep, but if you were motivated, it went flat relatively quickly. Flying basic maneuvers has become as routine for you as rolling into a steep turn. You hanker for more: snap, vertical, and hesitation rolls; outside maneuvers; rolling circles; tailslides; inverted, accelerated, and flat spins; and gyroscopic maneuvers. In this book you will find them all and more.

You do not have to be a competition pilot to fly advanced aerobatics. Indeed, all pilots with basic aerobatic skills will find it enlightening to explore the realm of advanced maneuvers. As you came to build proficiency in basic aerobatics, it must have been quite a revelation, as it was to us, to realize how little you previously understood about what really happens to an airplane outside straight-and-level flight and moderately banked turns.

Sellers of airplanes and flight training never tire of telling us (and they are right) that nonaerobatic pilots are perfectly safe without ever having to do a spin

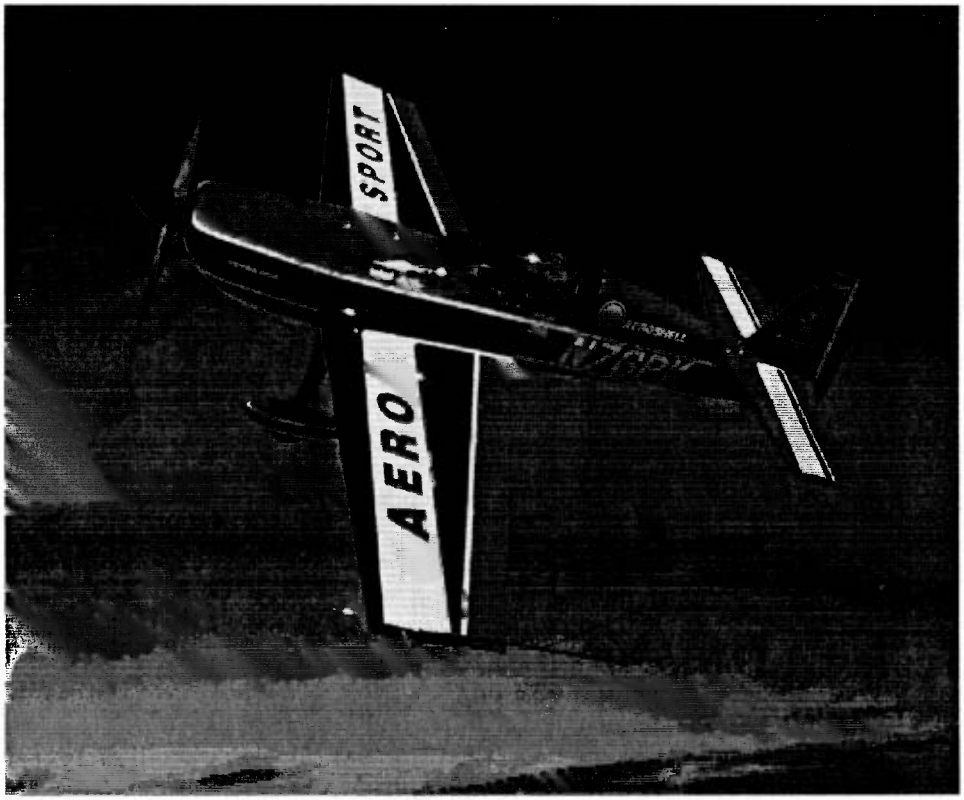

Phil Knight in his Extra 300S.

or a full stall during their training, provided they learn to religiously avoid the conditions under which they occur. But to aerobatic pilots that contention is as constraining as saying that children who have not been taught to cross the street are perfectly safe as long as it is effectively drummed into their heads that they are never to leave the block. The whole world waits to be discovered across the street!

Advanced aerobatics can further expand your understanding of an aircraft's behavior throughout its envelope. In time you will realize how much eluded your comprehension when you were flying only the basic maneuvers. But you will also realize something else about aircraft behavior that might surprise you a little. You will find that there isn't always universal agreement among the world's top aerobatic pilots regarding some of the more subtle reasons for an aircraft's behavior under certain extreme flight conditions. The pilots all fly the most complex maneuvers perfectly, but they might argue passionately into the night about some of the more obscure aspects of its causal factors. This is perfectly normal and, once you are able to follow the discussion, quite exciting. At its highest level, advanced aerobatics is a frontier where some subtleties are still not fully understood.

We faced a difficult choice in deciding how technical we should get when explaining the forces acting on an aircraft in complex aerobatic maneuvers. A whole book could be written crammed full of force vectors and lift and drag coefficient formulae. We chose not to do that. In *Basic Aerobatics*, we presented a comprehensive discussion of the fundamental physics at work during aerobatic flight. Those principles apply equally to advanced aerobatics and, in our judgment, are a sufficient foundation for pilots. Any more detailed technical discussion of the physics of aerobatics should be the happy domain of a graduate student of aeronautics who is preferably also an enthusiastic aerobatic pilot.

We do present additional discussion of the forces acting on aerobatic aircraft in those instances in which they are particularly relevant to the advanced aerobatic pilot but of less concern to the basic pilot. We specifically go into greater detail on gyroscopic precession, slipstream effect, torque, sideslip, and the forces at work in autorotation.

While it is not necessary to be a competition pilot to fly advanced aerobatics, you'll find that competition flying is the perfect way to hone your advanced aerobatic skills, and most advanced aerobatic pilots do compete. Competition provides a regular opportunity to have your flying judged. It allows you to observe and benefit from the experiences of your peers. If you are at all competitive, it also lets you experience the thrill of flying to win. All the maneuvers in *Advanced Aerobatics* are taught to be flown to competition standards. Getting started in competition flying, selecting the aerobatic aircraft that best suits your needs, moving up in the ranks, designing advanced sequences, arranging effective coaching and critiquing, and establishing rigorous physical and mental training regimes are also discussed.

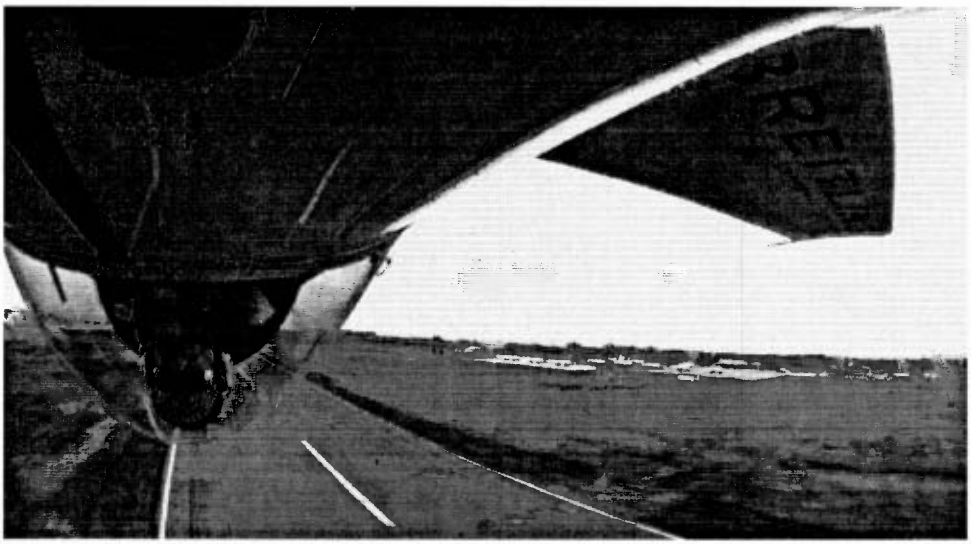

Patrick Paris on the low line.

With the exception of advanced spins, learn the maneuvers in the sequence that they are presented in this book. They are in a particular order to teach you what you are ready for at a given skill level. As sequenced, each maneuver plays a part in giving you the foundation for subsequent maneuvers.

When you fly advanced aerobatics, you always run the risk of inadvertently finding yourself in some form of advanced spin. You should determine with your instructor when it is most appropriate for you to get advanced spin training, given the nature of the advanced aerobatic training program designed to meet your personal needs, and you should never fly any of the maneuvers in this book solo without being trained and able to consistently recover from advanced spins.

Speaking of instructors and flying solo, it is also important to point out what this book is not: It is not under any circumstances a self-study manual for learning to fly advanced aerobatics by your lonesome self. Don't ever attempt to fly any of these maneuvers solo without first receiving relevant comprehensive dual instruction from a competent advanced aerobatic instructor in an aircraft with performance and handling characteristics similar to the one in which you fly solo. Contact any of the aerobatic schools in Appendix G, or get a current list from the International Aerobatic Club (the address appears in Appendix A) if you are not already familiar with the aerobatic community.

Advanced aerobatics remains one of the last great opportunities to unleash your physical flying skills to their limits. Unhindered by air traffic control and computers in the cockpit, it is real flying at its primeval best. So strap in, pull vertical, and enjoy it up there!

1

The world of advanced aerobatics

The easy way to define *advanced aerobatics* would be to say that it is everything we didn't cover in *Basic Aerobatics*. But like most sweeping generalizations, that would not be very helpful. The world of advanced aerobatics is vast and complex and does not lend itself to formal definition. To some pilots it might simply mean maneuvers of ever-increasing complexity. To others it might also include advanced-level competition. Even the competition categories can be confusing. Intermediate, Advanced, and Unlimited level competition all count as advanced aerobatics. Only the degree of complexity is different from category to category. In this chapter we outline the main characteristics of the world of advanced aerobatics and help you begin to form an idea about where your goals and aspirations fit in.

WHAT IS ADVANCED AEROBATICS?

There is really no formal dividing line between basic and advanced-level aerobatics. Rather, there is an informal understanding in the aerobatic community that anything beyond simple inside maneuvers and the upright conventional spin is considered advanced aerobatics.

A core collection of individual maneuvers are the building blocks of advanced-level competition aerobatics: the horizontal snap roll, the vertical roll, the hesitation roll, the outside loop, the rolling circle, the tail slide, the vertical snap roll, and the inverted spin. Given the heavy emphasis on autorotational maneuvers in advanced aerobatic competition today, we would have had most of the field covered if we wrote a book called *Snaps and Spins*.

In a category of their own are gyroscopic maneuvers and accelerated and flat spins, flown in the four-minute freestyle event, which is run as an independent encore to a regular competition and is judged separately by its own standards.

Learning to fly the building-block maneuvers well is the key to becoming a good advanced aerobatic pilot, but there is much more to the sport than that. As you become conversant with the maneuvers, you will realize that their variations and combinations are practically infinite along horizontal, vertical, and 45-degree lines of flight (Fig. 1-1). Some even have individual names, such as the humpty bump, but in fact they are variations of a building-block maneuver; a humpty bump is a small half loop on two vertical lines (Fig. 1-2). It may be an outside or inside half loop, entered with a push or a pull.

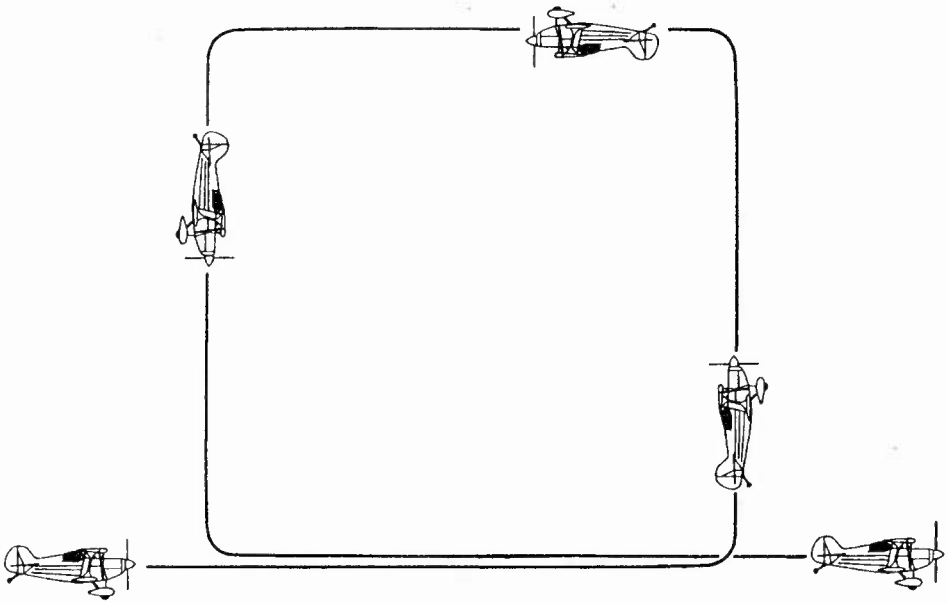

Fig. 1-1. The inside square loop is really a series of tight quarter loops combined with vertical lines.

Speaking of push and pull, advanced aerobatics has its own jargon. Here are some basic terms we use throughout the book:

inside Any time the aircraft is under positive G, it is said to be inside. In an inside loop, for example, the aircraft is pulling positive G (the pilot's head is pointing toward the inside of the loop).

outside Whenever the aircraft is under negative G, it is said to be outside, as, for example in the outside loop (the pilot's head points away from the inside of the loop).

positive This term is used to describe the aircraft's attitude on the vertical line. On the vertical *up line*, the aircraft is said to be positive if its nose is slightly forward of the vertical line as seen by the judge. On the vertical *down line*, it is said to be positive if the nose is aft of the down line. (See Chapter 4, Figs. 4-1 and 4-2.)

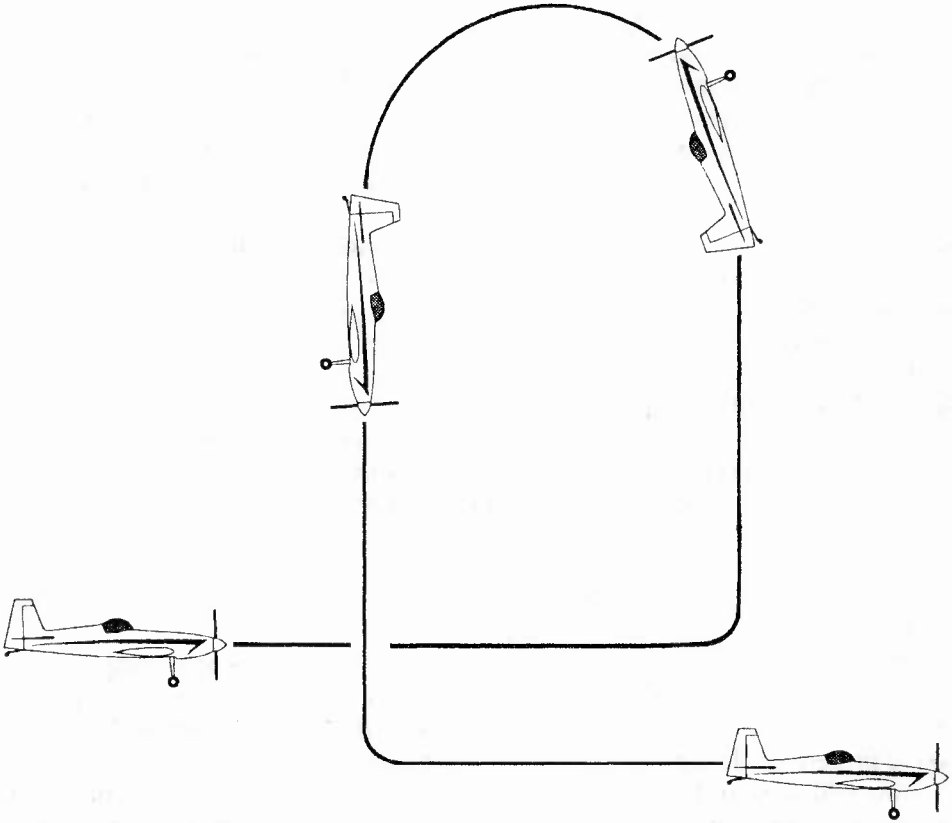

Fig. 1-2. The pull, pull, pull humpty bump consists of two quarter loops and a half loop, combined with vertical lines.

negative This term also describes the aircraft's attitude on the vertical line. On the vertical up line, the aircraft is said to be negative if its nose is slightly aft of the vertical line as seen by the judge. On the vertical down line it is said to be negative if the nose is forward of the down line. (See Chapter 4, Figs. 4-1 and 4-2.)

push To push is to initiate an outside maneuver. The term comes from having to push the stick to apply negative G.

pull To pull is to initiate an inside maneuver. The pilot pulls the stick to apply positive G.

up line The aircraft is said to be on an up line when it is on a straight-line ascending flight path. There are 45° up lines and vertical up lines.

down line The opposite of an up line. The aircraft may be on 45° or vertical down lines.

load To load an aircraft means moving the controls in a manner that applies G to the aircraft. For example, as you pull back the stick to establish the aircraft on the vertical up line, you load the aircraft during the pull.

unload To unload an aircraft means moving the controls in a manner that decreases the G load on an aircraft. For example, as you ease off the stick once the aircraft is established on the vertical, you unload the aircraft.

torque Any movement of the aircraft induced by the engine's torque. This movement might be initiated on purpose, as in a torque roll, or it might be an inadvertent effect, as when the pilot fails to keep torque under control in a hammerhead.

barreled Any type of roll that is not rolling true along the aircraft's longitudinal axis but in a corkscrew fashion around it is said to be barreled.

pinched A loop is pinched when at the end the pilot pulls too hard and the aircraft completes the maneuver on a stunted elliptical path rather than along a perfectly circular one.

flick A flick is another word for *snap roll*, used mostly in British English.

slide An aircraft is said to slide when it descends backward along the vertical up line. This term is also an alternative name for the *tailslide* maneuver.

hunting An aircraft is said to be hunting for the vertical line when it is having difficulty firmly establishing itself on the vertical line.

buried An aircraft is said to be buried when it is too deeply in the stall in a snap roll. The consequence of being buried is to lose too much energy by the time the aircraft completes the maneuver.

You will learn that there are several subtly different ways to accomplish certain maneuvers. Which option you choose is in part a matter of personal preference and in part a function of your aircraft's handling characteristics. We do our best to present all the options and explain our personal preference.

You will also find that different pilots have different preferences for using landmarks and internal timing as references to maintain positional awareness during the maneuvers. These preferences seem to be largely a function of the terrain features in the area where a pilot does most of his or her flying. Pilots used an extensive grid of straight highways and canals, a common terrain feature in Florida, develop a greater instinctive reliance on ground references. Pilots who fly where grid references are largely absent, as is the case in the northeast United States, tend to depend on their internal timing to a greater extent.

THE IMPORTANCE OF BASIC SKILLS

Advanced aerobatics take you closer to the edge than you have ever been before, leaving little margin for error in flying a maneuver well. The slightest deviation from the precise control inputs required can turn an acceptable maneuver into a sloppy mess. Furthermore, to a greater extent than in basic maneuvers, an error at one stage of a maneuver has a compound effect on subsequent stages. At best you'll struggle to make corrections, at worst the whole maneuver might unravel. Precision is paramount in advanced aerobatics.

If one overriding principle can make you the best advanced aerobatic pilot that you can be, it is that you need to have the basic skills down cold. If you don't have this foundation, you'll still be able to slog through the maneuvers and greatly impress the casual observer (and perhaps yourself), but you'll never be a top advanced

Mike Goulian on knife-edge.

aerobatic competition pilot. More importantly, you'll never fly to the limits of your own personal talent. And if something is worth doing, isn't it worth doing well?

The requirement for extreme precision in setting up maneuvers can cause basic aerobatic pilots some difficulty as they make the transition to advanced aerobatics. In basic maneuvers you have more latitude in correcting for such errors as pulling vertical with a wing low. The corrective action might introduce subtle loads that shouldn't be there in the first place, but they don't really matter in a basic maneuver. If, for example, you apply a touch of opposite rudder to correct a wing-low condition on the up line, you can still precisely perform the basic hammerhead in spite of the sideslip you've introduced. However, in an advanced maneuver, such as a vertical roll or a tailslide, any sideslip causes mediocre results at best.

If you've developed any bad habits in basic aerobatics you'll have to unlearn them. Don't let ego get in the way. If a good coach evaluates your performance and tells you that for the next 10 sessions you'll do nothing but learn to fly vertical and 45-degree lines, don't be offended. Be thankful that someone spotted a weakness in your foundation skills and can help make you a much better pilot by working with you to fix it.

ADVANCED COMPETITION FLYING

While you need not be a competition pilot to fly advanced aerobatics, preparing for and flying in competitions is one of the most popular and effective ways of

practicing the sport. The competition scene's support structure immeasurably eases your path to becoming a competent advanced aerobatic pilot. The access provided by its network to coaching and peer support is invaluable, as are the opportunities to have your performance regularly evaluated on the competition circuit. We went into some detail in *Basic Aerobatics* on how to get started in competition flying. Here we review the essentials and address issues most relevant to advanced aerobatic pilots.

The International Aerobatic Club and the competition scene

The *International Aerobatic Club* (IAC) is America's national aerobatic organization run by a small professional staff and a large pool of very dedicated volunteers. Its task is to support the sport of aerobatics through a national network of local IAC chapters and the sponsorship and supervision of regional and national aerobatic competitions. The IAC is international in the sense that membership is open to anyone worldwide, and groups of IAC members anywhere are free to form local IAC chapters of their own.

Throughout the year, regional competitions are held in the various parts of the country. Once a year the IAC organizes the U.S. National Championships, traditionally in September. In addition to establishing national champions in the various categories, every other year the nationals are the selection event for the members of the U.S. Aerobatic Team, which competes in the biannual World Aerobatic Championships. The top five men and women finishers in the Unlimited category make the U.S. Aerobatic Team. It is worth noting that in the United States men and women compete and are scored together while in other countries the scores are still segregated into separate men's and women's results.

These aircraft are both CAP 231s. This type swept the 1994 World Championships.

In the United States, there are five competition categories: *Basic, Sportsman, Intermediate, Advanced,* and *Unlimited*. At the national level, events are held in all categories, and at the regional competitions every attempt is made to do so if there are enough entrants.

The Basic and Sportsman categories are the events in which the competitors fly what we consider basic-level aerobatics. The Intermediate category provides the first level of opportunity to fly advanced-level aerobatics in competition. The stakes rise rapidly in the Advanced and Unlimited categories. Take a look at the differences in the level of difficulty in the three categories.

Intermediate

The Intermediate category has very little use of negative-G maneuvers. Negative-G flying is mostly restricted to inverted straight-and-level flight. Snap rolls are featured regularly and partial vertical rolls appear for the first time. Good vertical penetration becomes an important characteristic for aircraft competing in this class.

Advanced

In the Advanced category, negative maneuvers are routinely used for the first time. Greater use is made of more complex variations of maneuvers popular in the Intermediate category. Sophisticated combination maneuvers not seen in Intermediate are also used, and the rolling circle is introduced. Increased use is made of snap rolls.

Unlimited

The Unlimited category places a lot of emphasis on snap rolls and vertical figures. Outside snaps, vertical snaps, and tailslides appear for the first time. Rolling circles are a given. Anything in the FAI (Federation Aeronautique International) Aerobatic Catalog of 15,000-plus figures goes.

In Chapter 11, "Advanced Sequence Composition," we take you through Intermediate, Advanced, and Unlimited sequences to illustrate the differences between them.

In Intermediate, Advanced, and Unlimited competition, pilots compete in the *known, freestyle,* and *unknown* events. The combined scores for all three events determine the final standings. For unlimited pilots, a separately judged and scored four-minute freestyle event takes place at the end of each regular competition.

Known The known event is published for each category for a given year by the relevant supervising body of aerobatic competition (IAC, FAI, and so on). Pilots can train for it in advance as much as they like before they go head to head with their peers at the various contests throughout the year.

Freestyle The freestyle sequence is a sequence composed by each pilot individually for a given competition season. It has to be approved by a judge prior to a competition. Like the known event, it is extensively practiced and rehearsed by the pilot prior to each competition.

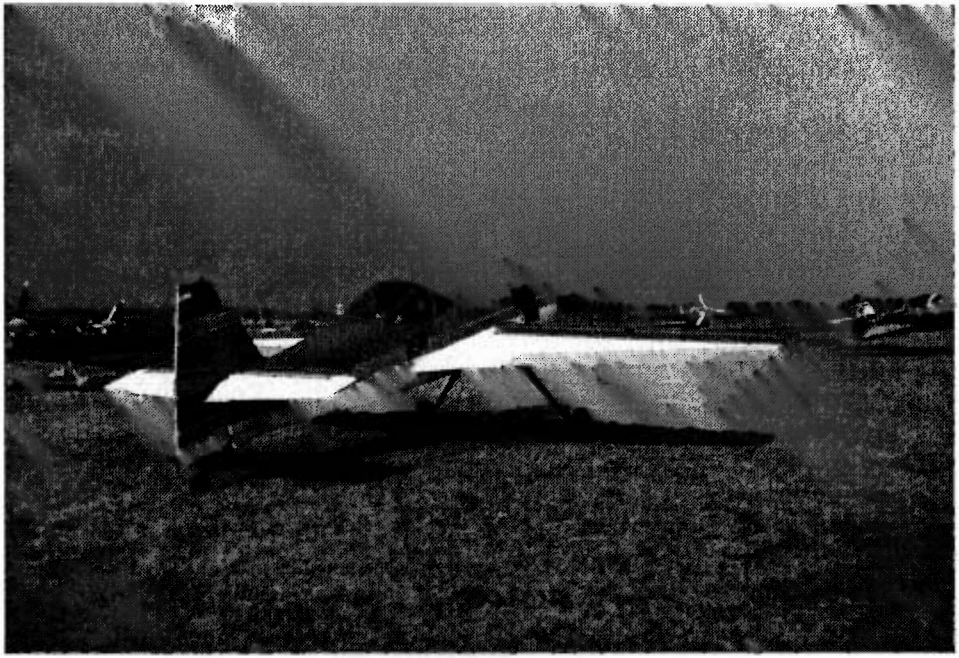

A Sukhoi 31 taxiing out to fly its competition sequence.

Unknown The unknown sequence is composed by the relevant sponsoring entity for each individual contest. Pilots are given the unknown sequence only 18 hours in advance of the event and are not allowed to practice it beforehand. This event tests the pilots' versatility and adaptability. Because of the lack of opportunity to fly the sequence before flying it in competition, it is perhaps the most challenging of the events.

Four-minute freestyle

The four-minute freestyle is a completely separate event from the regular competition, flown in unlimited only, at the end of each regular competition. Participating pilots fly a freestyle sequence of their own composition. Gyroscopic maneuvers are not only allowed, they are expected to be the main elements of the program for pilots hoping to do well. As the name implies, the four-minute freestyle is time-limited to last exactly four minutes. Penalties are imposed for erring on either side of the four-minute limit. It is judged by its own criteria, with heavy emphasis on artistic elements such as originality, versatility, harmony, and rhythm. (See Chapter 10 for more details on the four-minute freestyle.)

At the present time, a competitor in the United States can enter any of the five categories. There are no qualifying requirements. However, if you display such gross ineptitude that you compromise flying safety, the contest officials can bar you from the rest of the competition. This system of relying on the basic human instincts for self-esteem and self-preservation to control who enters what

events has worked well. Nobody wants to look like a fool, and nobody wants to get hurt.

You do need an FAI sporting license (Fig. 1-3) to enter IAC-sanctioned Unlimited category events, but this is just a formality. The IAC issues the annually renewable license for a fee.

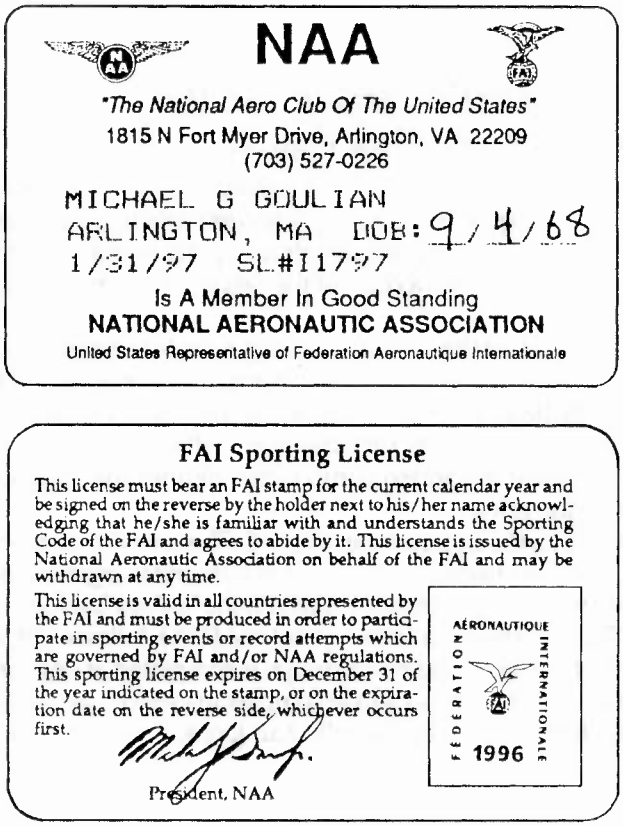
NAA

"The National Aero Club Of The United States"
1815 N Fort Myer Drive, Arlington, VA 22209
(703) 527-0226

MICHAEL G GOULIAN
ARLINGTON, MA DOB: 9/4/68
1/31/97 SL#I1797

Is A Member In Good Standing
NATIONAL AERONAUTIC ASSOCIATION
United States Representative of Federation Aeronautique Internationale

FAI Sporting License

This license must bear an FAI stamp for the current calendar year and be signed on the reverse by the holder next to his/her name acknowledging that he/she is familiar with and understands the Sporting Code of the FAI and agrees to abide by it. This license is issued by the National Aeronautic Association on behalf of the FAI and may be withdrawn at any time.

This license is valid in all countries represented by the FAI and must be produced in order to participate in sporting events or record attempts which are governed by FAI and/or NAA regulations. This sporting license expires on December 31 of the year indicated on the stamp, or on the expiration date on the reverse side, whichever occurs first.

President, NAA

FÉDÉRATION AÉRONAUTIQUE INTERNATIONALE
1996

Fig. 1-3. FAI sporting license.

Given that the choice of participation level is left up to you, it is your responsibility to choose a level that works best for you. The temptation is great to step up to the next level as soon as you can barely struggle through its maneuvers. This strategy is a mistake. You will be so hard-pressed to just get through the sequences in competition that you won't really be able to learn anything from them. You'll be in over your head.

Many pilots are of the opinion that the most efficient way to move up in the ranks is to move up into the next category only when you can consistently finish in the top third of the field in the previous category. We share this opinion and reiterate it throughout this book.

Rules

The rules of competition are set out in the *IAC Official Contest Rules*, an annual publication. It is important to keep current because the rules can and do change from year to year. Aerobatics is constantly evolving, and the rules have to keep pace. The IAC rules are largely based on the guidelines of the Federation Aeronautique International and CIVA, its aerobatic division, which are the ultimate international arbiters of the sport.

The FAI Aerobatic Catalog and the concept of constructing figures

Supplementing the rule books is the *FAI Aerobatic Catalog*. It is the successor document to the *Aresti Catalog*, which was the first comprehensive compilation of aerobatic figures. Rather than go to great length to explain how to read the symbology, we strongly suggest you obtain a copy of the catalog. It contains detailed user's instructions.

Even a cursory look at the *Aerobatic Catalog* reveals the method of constructing aerobatic figures. There are relatively few foundation lines and figures. The rest are variations of the basic figures or composite figures of varying degrees of complexity. Each element has a difficulty coefficient (K). The total of the foundation figure's K and the Ks of the added components defines the total score of the maneuver created by the pilot.

Take, for example, the maneuver in Fig. 1-4. The foundation maneuver is a half loop, worth 6K. It is then loaded with K at both horizontal segments to create a compound maneuver with a high potential score. At the bottom is a four-point roll (11K). At the top is a "3 of 2," which is a 1½ two-point roll (12K), followed by a double inside snap (17K). By the time the maneuver's design is completed, it has gone from 6K to a total maximum score of 46K. It is a single complex maneuver, yet to fly it you need to know how to fly slow rolls, hesitation rolls, half loops, and snap rolls.

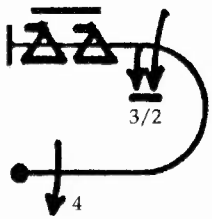

Fig. 1-4
An inside half loop with a four-point roll, a 3 of 2, and a double snap roll.

The Aerobatic Catalog groups the maneuvers into nine families:

1. Lines and angles
2. Turns and rolling turns

3. Combination of lines
4. Spins
5. Hammerheads (stall turns)
6. Tailslides
7. Loops and eights
8. Combination of lines, angles and loops
9. Rolls

Figures from Family 9 must always be combined with a maneuver from another family. Maneuvers in Families 1 through 8 may be flown stand-alone or in combination with elements from Family 9. It is estimated that the total number of figures that can be derived from the catalog exceeds 15,000. If you become proficient in the maneuvers covered in the book, you should be able to handle any combination.

For a flavor of how figures are defined, see Appendix B, which presents selected extracts from the rules. For a comprehensive understanding, obtain the *IAC Official Contest Rules*, as well as the *FAI Aerobatic Catalog*, both available from IAC.

The aerobatic box

The *aerobatic box* is the arena of aerobatic competition. It is an imaginary box of airspace with a base 3300 feet by 3300 feet and a height of 3500 feet agl. The floor of the box varies by competition category. For Basic and Sportsman, it is 1500 feet, for Intermediate it is 1200 feet, for Advanced it is 800 feet, and for Unlimited it is 328 feet, or 100 meters (Fig. 1-5).

The box has two axes, the X and the Y axis. The X axis is the main performance axis in front of the judges, along which most of the maneuvers are flown. The maneuvers flown along the Y axis are known as crossbox or wind-corrector maneuvers used to reposition the aircraft to counter the effects of wind (see Chapters 11 and 13). The box is segmented into three equal zones along the X axis. Each maneuver in a sequence must be flown in the segment of the box in which it is placed on the sequence card.

As you become proficient in flying advanced maneuvers to competition standards, it is important that you learn to fly your sequences in a practice box supervised by a qualified instructor or coach. Many coaches and IAC chapters have a designated FAA-approved practice box. If there are no practice boxes in your area, work with your local chapter and the FAA to establish one.

International competition

Most countries that have an active aerobatic movement have some form of national competition system similar to the U.S. system. There are currently two important international events: the World Aerobatic Championships and the European Championships, held biannually in alternating years. Both the World

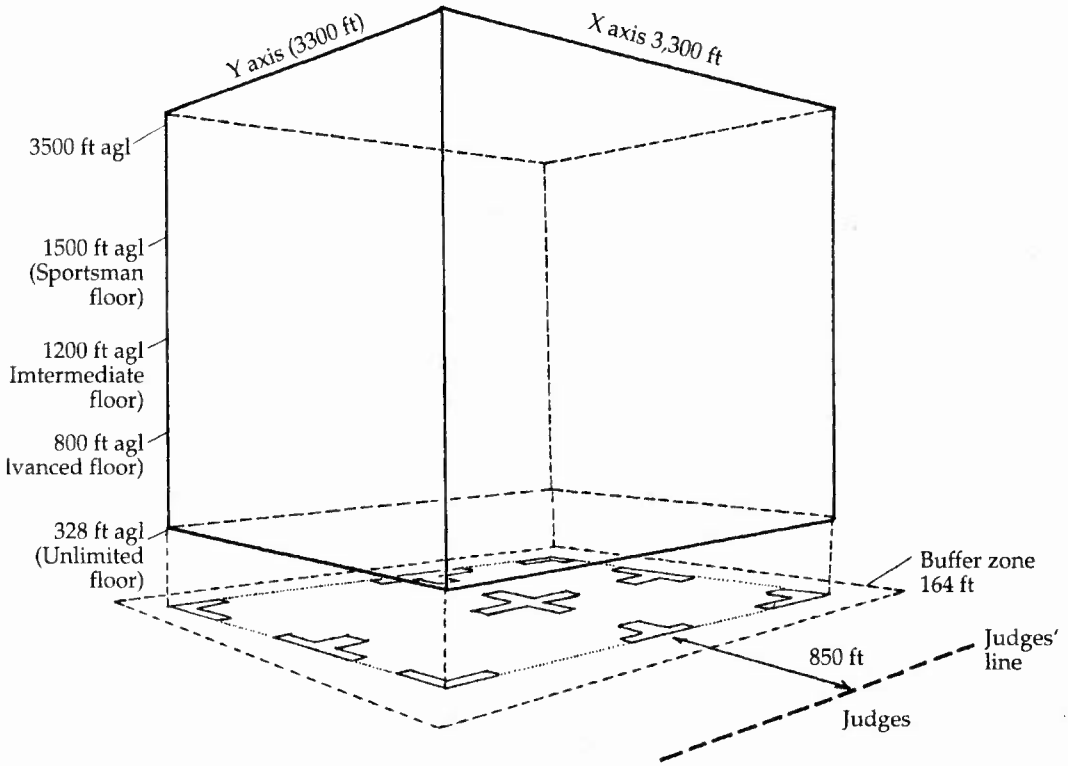

Fig. 1-5 The aerobatic box.

and European Championships are restricted to Unlimited pilots who are members of their national team. Team selection is at the discretion of individual countries. It is possible for foreign nationals to fly in the national championships of countries other than their own on an unofficial basis.

Various efforts are being made to popularize aerobatics and expand opportunities for international competition. There have been experiments with holding world championships for categories other than Unlimited, such as the Advanced World Aerobatic Championships held for the first time in 1994 in South Africa. Attempts are underway to hold an FAI-sanctioned Grand Prix of Aerobatics based on the four-minute freestyle event and consisting of a series of Grand Prix events during the year held at locations throughout the world. The Grand Prix complements the World Aerobatic Championships and has corporate sponsorship. Contestants are selected from the top finishers at the worlds.

The competition scene is never static. In the 1930s it was characterized by freestyle duels at airshows. During the Cold War, East dueled West with massive government support from various countries on both sides. In the entrepreneurial

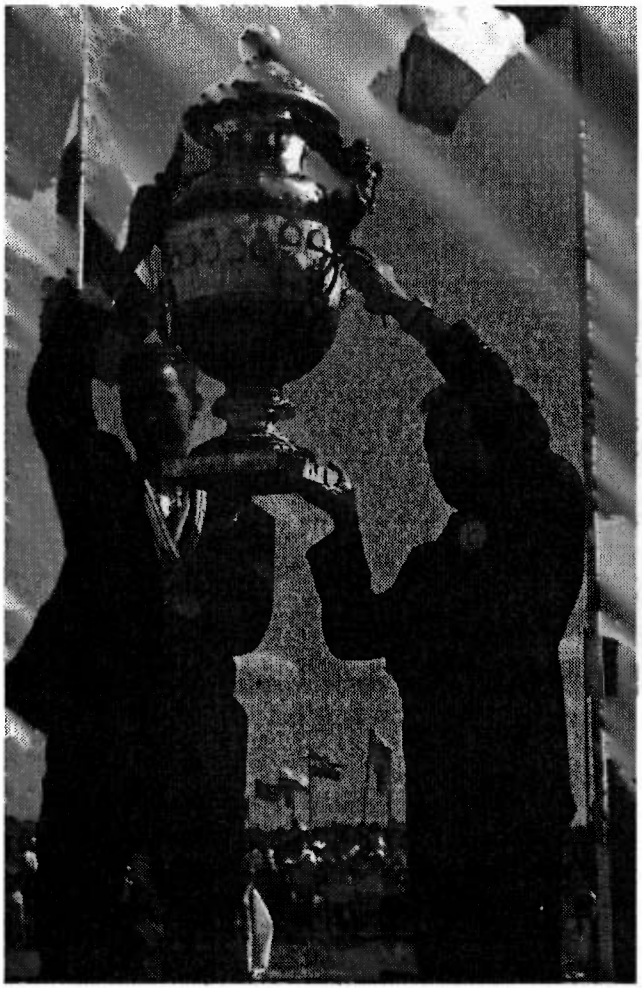

The Aresti Cup is presented to the world champion. Xavier de L'Apparent (left) was the 1994 recipient. The French coach was Coco Bessier.

1990s, opportunities for corporate sponsorship of events seems to be on the increase. You have to keep your ear to the ground. But you can be sure that whatever the circumstances, the practitioners of the sport will always find a way to compete.

IAC ACHIEVEMENT AWARDS

If you don't want to compete but would like to participate in a systematic program to improve your aerobatic skills, you should consider the IAC's Achievement Awards. It is a program designed along the lines of the various competition categories. Participants fly, at their leisure, a series of maneuvers within a category while observed by an IAC judge. A participant who can successfully complete the required maneuvers within a given category is awarded a certificate of achievement in recognition of the skill level accomplished. Anyone who is an IAC member worldwide can participate. For a full description of this program, see Appendix D.

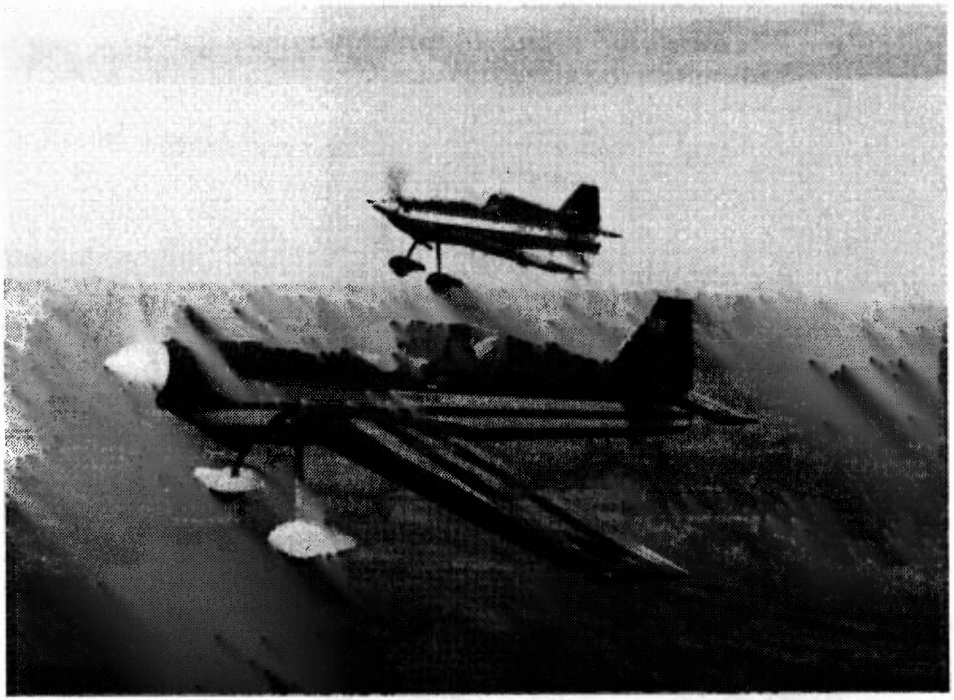

The kitbuilt Giles 200 (rear) and 202 bring affordable Unlimited aerobatics in a monoplane.