AIRCRAFT TECHNICAL BOOK COMPANY

CAT-A

AVIATION MAINTENANCE TECHNICIAN CERTIFICATION SERIES

TURBINE AEROPLANE
STRUCTURES AND SYSTEMS

11

COMPLIANT WITH EASA PART 66/147

EASA 2023-989 COMPLIANT

Update notices for this book will be available online at www.actechbooks.com/revisions.html
If you would like to be notified when changes occur, please join our mailing list at www.actechbooks.com

VERSION	EFFECTIVE DATE	DESCRIPTION OF REVISION(S)
001	2015.01	Module creation and release.
002	2024.06	Regulatory update for EASA 2023-989 Compliance.
002.1	2025.01	Page 3.16 - Corrected term thermoplastics to thermoset polymers. Page 9.5 - Corrected the orientation of left side checknut Figure 9-11. Page 12.13 - Replaced to improve Figure 12-22.
002.2	2025.07	Corrected various minor typos and formatting.

Module was reorganized based upon the EASA 2023-989 subject criteria. Enhancements included in this version 002.2 are:

11.1.2 *High Speed Flight* - topic moved to Module 8 Basic Aerodynamics.
11.3.1 *Airborne Towing Devices* - topic added.
11.5.2 *Avionics Test Equipment* - topic added.
11.10 *Inert Gas Systems* - topic added.
11.11 *Tail Protection* - topic added.
11.16 *Pneumatic Pumps* - topic added.
Question and Answer updates for all Submodules.

TABLE OF CONTENTS

TURBINE AEROPLANE STRUCTURES AND SYSTEMS

Revision Log . . . iii
Measurement Standards . . . iv
Basic Knowledge Requirements . . . v
Part 66 Basic Knowledge Requirements . . . vi
Table of Contents . . . xi

11.1 THEORY OF FLIGHT . . . 1.1
Section A . . . 1.1
Primary Flight Control Surfaces . . . 1.1
Roll Control Devices . . . 1.2
Ailerons . . . 1.2
Spoilers . . . 1.3
Pitch Control Devices . . . 1.3
Elevators . . . 1.3
Stabilators . . . 1.4
Variable Incidence Stabilizers . . . 1.4
Canards . . . 1.4
Yaw Control Devices . . . 1.5
Rudders . . . 1.5
Rudder Limiters . . . 1.5
Elevons and Ruddervators . . . 1.5
Elevons . . . 1.5
Ruddervators . . . 1.5
High Lift Devices . . . 1.5
Slots . . . 1.5
Slats . . . 1.6
Flaps . . . 1.6
Flaperons . . . 1.7
Drag Inducing Devices . . . 1.8
Secondary and Auxiliary Control Surfaces . . . 1.8
Trim Tabs . . . 1.8
Servo Tabs . . . 1.9
Control Surface Bias . . . 1.9
Section B . . . 1.9
Operation and Effects . . . 1.9
Balance Tabs . . . 1.9
Anti-Servo/Anti-Balance Tabs . . . 1.9
Spring Tabs . . . 1.9
Mass Balance . . . 1.10
Aerodynamic Balance Panels . . . 1.10
Wing Fences . . . 1.10
Saw Tooth Leading Edge . . . 1.10
Boundary Layer Control . . . 1.11
Vortex Generators . . . 1.11
Stall Wedges . . . 1.11
Submodule 1 Practice Questions . . . 1.13
Submodule 1 Practice Answers . . . 1.14

11.2 AIRFRAME STRUCTURES (ATA 51) . . . 2.1
Section A . . . 2.1
Zonal And Station Identification Systems . . . 2.1
Zonal Identification System . . . 2.2
Access And Inspection Panels . . . 2.2
Electrical Bonding . . . 2.4
Bonding Procedures and Precautions . . . 2.4
Lightning Strike Protection . . . 2.4
Section B . . . 2.5
Structural Classification . . . 2.5
Primary Structure . . . 2.5
Secondary Structure . . . 2.5
Tertiary Structure . . . 2.5
Damage Tolerant Concepts . . . 2.5
Fail Safe . . . 2.5
Safe Life . . . 2.5
Damage Tolerance . . . 2.5
Structural Stresses . . . 2.6
Hoop Stress . . . 2.6
Metal Fatigue . . . 2.6
Drains and Ventilation . . . 2.7
Drainage . . . 2.7
Ventilation . . . 2.8
System Installation Provisions . . . 2.8
Section C . . . 2.8
Airframe Structural Methods . . . 2.8
Fuselage Types . . . 2.8
Truss Type . . . 2.8
Stressed Skin Monocoque . . . 2.8
Semimonocoque Type . . . 2.9
Fuselage Components . . . 2.9
Frames . . . 2.9
Formers . . . 2.9
Stringers and Longerons . . . 2.9
Bulkheads . . . 2.9
Doublers . . . 2.10
Struts & Ties . . . 2.10
Reinforcement . . . 2.10
Skinning . . . 2.10
Wing and Empennage Attachment . . . 2.11
Engine Attachment . . . 2.12
Structural Assembly Techniques . . . 2.12
Corrosion Protection . . . 2.13
Methods of Surface Protection . . . 2.14
Chromating . . . 2.14
Anodizing . . . 2.15
Cladding . . . 2.15
Painting . . . 2.15
Surface Cleaning . . . 2.15
Exterior Aircraft Cleaning . . . 2.15
Airframe Symmetry . . . 2.15
Checking Dihedral . . . 2.17
Checking Incidence . . . 2.17
Checking Fin Verticality . . . 2.17
Checking Engine Alignment . . . 2.18
Symmetry Check . . . 2.18
Submodule 2 Practice Questions . . . 2.19
Submodule 2 Practice Answers . . . 2.20

11.3 AIRFRAME STRUCTURES — AEROPLANES . . . 3.1
11.3.1 Section A . . . 3.1
Fuselage, Doors, Windows (ATA 52/53/56) . . . 3.1

TABLE OF CONTENTS

Fuselage Construction . . . 3.1
Pressurization Sealing . . . 3.1
Attachments . . . 3.2
Wings . . . 3.2
Stabilizers . . . 3.2
Pylons . . . 3.2
Undercarriage . . . 3.2
Seat Installation . . . 3.2
Windows and Windscreens . . . 3.3
Construction . . . 3.3
Mechanisms . . . 3.3
Attachment . . . 3.3
Windscreens . . . 3.4
11.3.1 Section B . . . 3.5
Airborne Towing Devices . . . 3.5
Tow Hook Inspection . . . 3.5
11.3.1 Section C . . . 3.5
Doors and Emergency Exits . . . 3.5
Construction . . . 3.5
Mechanisms . . . 3.5
Cargo Loading Systems . . . 3.6
11.3.2 Wings (ATA 57) . . . 3.6
Wing Construction . . . 3.6
Wing Spars . . . 3.7
Wing Ribs . . . 3.9
Wing Roots and Tips . . . 3.9
Wing Skin . . . 3.9
Fuel Storage . . . 3.9
Attachments . . . 3.12
Landing Gear . . . 3.12
Pylons . . . 3.12
Control Surfaces . . . 3.12
High Lift and Drag Devices . . . 3.12
11.3.3 Stabilizers (ATA 55) . . . 3.13
Stabilizer Construction . . . 3.13
Stabilizer Attachment . . . 3.14
11.3.4 Flight Control Surfaces (ATA 57) . . . 3.14
Construction and Attachment . . . 3.14
Balancing Flight Controls . . . 3.15
Static Balancing . . . 3.15
Aerodynamic (Dynamic) Balancing . . . 3.15
11.3.5 Nacelles/Pylons (ATA 54) . . . 3.15
Nacelles . . . 3.15
Nose Cowl . . . 3.15
Cowling Doors . . . 3.15
Pylons . . . 3.15
Firewalls . . . 3.16
Submodule 3 Practice Questions . . . 3.17
Submodule 3 Practice Answers . . . 3.18

11.4 AIR CONDITIONING AND CABIN PRESSURIZATION (ATA 21) . . . 4.1
Section A . . . 4.1
Pressurization Terms . . . 4.1
Pressurization Systems . . . 4.1
Cabin Pressure Controllers, Control and Safety Valves . . . 4.1
Pressurization Modes . . . 4.1
Cabin Pressure Controllers . . . 4.2
Control Valve (Outflow Valve) . . . 4.3
Control and Indication . . . 4.3
Cabin Air Pressure Safety Valve Operation . . . 4.3
Pressurization Indication . . . 4.3
Pressurization Operation . . . 4.4
Cabin Pressurization Troubleshooting . . . 4.5
Section B . . . 4.5
Sources of Air Supply . . . 4.5
Bleed Air . . . 4.5
Auxiliary Power Unit (APU) . . . 4.5
Ground Cart . . . 4.5
Section C . . . 4.8
Air Cycle Air Conditioning . . . 4.8
System Operation . . . 4.8
Pneumatic System Supply . . . 4.8
Component Operation . . . 4.8
Pack Valve . . . 4.8
Bleed Air Bypass . . . 4.8
Primary Heat Exchanger . . . 4.8
Refrigeration Turbine Unit or Air Cycle Machine and Secondary Heat Exchanger . . . 4.9
Water Separator . . . 4.10
Refrigeration Bypass Valve . . . 4.10
Vapor Cycle Air Conditioning . . . 4.10
Theory of Refrigeration . . . 4.11
Basic Vapor Cycle . . . 4.11
Vapor Cycle Air Conditioning System Components . . . 4.11
Refrigerant . . . 4.11
Receiver Dryer . . . 4.12
Expansion Valve . . . 4.13
Evaporator . . . 4.13
Compressor . . . 4.13
Condenser . . . 4.14
Service Valves . . . 4.14
Flow, Temperature and Humidity Control . . . 4.15
Flow Control . . . 4.15
Temperature Control . . . 4.15
Humidity Control . . . 4.15
Section D . . . 4.16
Protection and Warning Devices . . . 4.16
Submodule 4 Practice Questions . . . 4.17
Submodule 4 Practice Answers . . . 4.18

11.5 INSTRUMENTS/AVIONICS SYSTEMS . . . 5.2
Instrument Systems . . . 5.2
Classifying Instruments . . . 5.2
Flight Instruments . . . 5.3
Engine Instruments . . . 5.3
Navigation Instruments . . . 5.3
Pitot-Static Systems . . . 5.4
Pitot Tubes and Static Vents . . . 5.4
Air Data Computers . . . 5.6
Pitot-Static Pressure Sensing Flight Instruments . . . 5.7
Altimeters . . . 5.7

Airspeed Indicators 5.9
Machmeters 5.9
Vertical Speed Indicators 5.10
Gyroscopic Instruments 5.11
Sources of Power for Gyroscopic Instruments 5.11
Pressure Driven Gyroscopic Instruments 5.11
Electrically Driven Gyroscopic Instruments 5.11
Principles Of Gyroscopic Instruments 5.11
Solid State Gyro Systems 5.12
Ring Laser Gyros 5.13
Microelectromechanical Attitude And Directional Systems 5.13
Attitude Heading and Reference Systems (AHRS) 5.14
Common Gyroscopic Instruments 5.14
Vacuum Driven Attitude Gyros 5.14
Electric Attitude Indicators 5.15
Gyroscopic Direction Indicator/Directional Gyro (DG) . . . 5.15
Turn Coordinators 5.16
Turn And Slip Indicators 5.16
Compass Systems 5.17
Direct Indicating Magnetic Compass 5.17
Vertical Magnetic Compass 5.17
Remote Indicating Compass 5.18
Remote Indicating Slaved Gyro Compass
(Flux Gate Compass) 5.18
Solid State Magnetometers 5.19
Stall Warning and Angle of Attack Indicators 5.19
Pressure Measuring Instruments 5.20
Types of Pressure 5.22
Pressure Instruments 5.22
Engine Oil Pressure 5.22
Engine Pressure Ratio (EPR) 5.22
Fuel Pressure 5.23
Hydraulic Pressure 5.23
Vacuum Pressure 5.23
Pressure Switches 5.24
Mechanical Movement Indicators 5.25
Tachometers 5.25
Electric Tachometers 5.25
Synchroscope 5.26
Temperature Measuring Instruments 5.27
Non-Electric Temperature Indicators 5.27
Electrical Temperature Measuring Indication 5.28
Electrical Resistance Thermometer 5.28
Ratiometer Electrical Resistance Thermometers 5.28
Thermocouple Temperature Indicators 5.29
Turbine Gas Temperature Indicating Systems 5.29
Total Air Temperature Measurement 5.30
Remote Sensing and Indication 5.30
Synchro Type Remote Indicating Instruments 5.30
DC Selsyn Systems 5.30
AC Synchro Systems 5.31
Remote Indicating Fuel and Oil Pressure Gauges 5.31
Glass Cockpit 5.31
Autoflight 5.33
Basis For Autopilot Operation 5.33
Autopilot Components 5.33
Sensing Elements 5.34
Computer and Amplifier 5.34
Output Elements 5.34
Command Elements 5.35
Autopilot Functions 5.36
Yaw Dampening 5.36
Automatic Flight Control System 5.36
Communications 5.37
Very High Frequency (VHF) Radios 5.38
High Frequency Radios 5.38
Selective Calling 5.38
Satellite Communication Systems (SATCOM) 5.38
Controller Pilot Data Link Communications (CPDLC) 5.38
Audio Systems 5.38
Service Interphone System 5.38
Emergency Locator Transmitter (ELT) 5.39
Cockpit Voice Recorders 5.39
Navigation Systems 5.41
VOR Navigation System 5.41
Automatic Direction Finder (ADF) 5.43
Instrument Landing Systems (ILS) 5.44
Localizer 5.44
Glideslope 5.45
Compass Locators 5.46
Marker Beacons 5.46
Microwave Landing Systems 5.47
Flight Director Systems 5.47
Distance Measuring Equipment (DME) 5.48
Area Navigation (RNAV) 5.49
Flight Management Systems (FMS) 5.49
Satellite Navigation Systems 5.51
Global Positioning System 5.51
Wide Area Augmentation System 5.51
Air Traffic Control Transponder 5.52
Transponder Tests And Inspections 5.54
Altitude Encoders 5.54
Collision Avoidance Systems 5.54
Traffic Collision Avoidance Systems (TCAS) 5.54
ADS-B 5.56
Weather Radar 5.57
Radio Altimeter 5.59
Inertial Navigation Systems 5.59
ARINC Communications and Reporting 5.60
Communication and Navigation Avionics Installations 5.61
Avionics General Test Equipment 5.61
Built in Test Equipment 5.61
Avionics Test Equipment 5.62
Multimeters 5.62
Oscilloscope 5.62
Pitot-Static Test Equipment 5.63
Specialized Test Equipment 5.63
Data Bus Analyzers 5.63
Test Equipment Calibration 5.63
Submodule 5 Practice Questions 5.73
Submodule 5 Practice Answers 5.74

TABLE OF CONTENTS

11.6 ELECTRICAL POWER (ATA 24) 6.1
Battery Charging 6.1
Constant Volt Charging 6.2
Constant Current Charging 6.2
Battery Inspection 6.2
Installation Practices 6.2
Battery Troubleshooting 6.2
DC Power Generation 6.2
Generator Control Systems 6.2
Voltage Regulation 6.4
Over Voltage Protection 6.4
Parallel Generator Operations 6.4
Reverse Current Sensing 6.4
Generator Controls for High Output Generators 6.4
Other Voltage Regulation 6.4
AC Power Generation 6.5
AC Alternators 6.5
Alternator Drive 6.6
AC Alternator Control Systems 6.7
Emergency Power Generation 6.8
Standby Power 6.8
Power Distribution on Small Multi-Engine Aircraft 6.8
Power Distribution on Large Aircraft 6.9
Split Bus Systems 6.9
Parallel Bus Systems 6.10
Split Parallel Systems 6.10
Inverters, Transformers and Rectifiers 6.11
Inverters 6.11
Rotary Inverters 6.11
Static Inverters 6.11
Transformers 6.12
Rectifiers 6.13
Circuit Protection 6.14
Current Limiting Devices 6.14
Fuses 6.14
Circuit Breakers 6.14
External/Ground Power 6.15
Submodule 6 Practice Questions 6.17
Submodule 6 Practice Answers 6.18

11.7 EQUIPMENT AND FURNISHINGS (ATA 25) 7.1
Section A 7.1
Emergency Equipment Requirements 7.1
Seats, Harnesses, And Belts 7.2
Seats 7.2
Seat Belts and Harnesses 7.2
Section B 7.3
Equipment Layout 7.3
Cabin Furnishing Installation 7.4
Cabin Entertainment Equipment 7.4
Galley Installation 7.4
Cargo Handling And Retention Equipment 7.5
Airstairs 7.6
Submodule 7 Practice Questions 7.7
Submodule 7 Practice Answers 7.8

11.8 FIRE PROTECTION (ATA 26) 8.1
Section A 8.1
Fire Protection 8.1
Requirements For Fire To Occur 8.1
Classes of Fires 8.1
Fire Zones 8.1
Fire Prevention 8.2
Fire Detection and Warning Systems 8.2
Requirements For Overheat and Fire Detection Systems 8.2
Thermal Switch Systems 8.2
Thermocouple Systems 8.3
Continuous Loop Systems 8.3
Fenwal System 8.3
Kidde System 8.4
Sensing Element 8.4
Combination Fire and Overheat Warning 8.5
Temperature Trend Indication 8.5
System Test 8.5
Fault Indication 8.5
Dual Loop Systems 8.5
Automatic Self Interrogation 8.5
Support Tube Mounted Sensing Elements 8.5
Fire Detection Control Unit (Fire Detection Card) 8.6
Pressure Sensor Responder Systems 8.6
Pneumatic Continuous Loop Systems 8.6
Averaging Function 8.6
Discrete Function 8.6
Smoke, Flame, And Carbon Monoxide Detection Systems 8.7
Smoke Detectors 8.7
Light Refraction Type 8.7
Ionization Type 8.7
Flame Detectors 8.7
Carbon Monoxide Detectors 8.7
Fire Extinguishing Systems 8.8
Fire Extinguisher Agents 8.8
Fixed Container Fire Extinguishing Systems 8.9
Containers 8.9
Discharge Valves 8.9
Pressure Indication 8.10
Two Way Check Valve 8.11
Discharge Indicators 8.11
Thermal Discharge Indicator (Red Disk) 8.11
Normal Discharge Indicator (Yellow Disk) 8.11
Fire Switch 8.11
Fire Protection in Cargo Compartments 8.11
Cargo Compartment Classification 8.11
Cargo Compartment Fire Protection and Warning 8.12
Smoke Detector Systems 8.12
Cargo Compartment Extinguishing Systems 8.13
Fire Protection in Lavatories 8.13
Lavatory Smoke Detector and Warning Systems 8.13
Lavatory Fire Extinguisher Systems 8.14
System Tests and Maintenance 8.14
Fire Detection Maintenance 8.14
Fire Detection System Troubleshooting 8.16
Fire Extinguisher System Maintenance 8.16

Container Pressure Check . . . 8.16
Discharge Cartridges . . . 8.16
Agent Containers . . . 8.17
Section B . . . 8.17
Cockpit and Cabin Interiors . . . 8.17
Portable Extinguisher Types . . . 8.17
Operation of Portable Fire Extinguishers . . . 8.18
Inspection of Portable Fire Extinguishers . . . 8.18
Maintenance of Portable Fire Extinguishers . . . 8.18
Submodule 8 Practice Questions . . . 8.21
Submodule 8 Practice Answers . . . 8.22

11.9 FLIGHT CONTROLS (ATA 27) . . . 9.1
Primary and Secondary Flight Controls . . . 9.1
Primary Controls . . . 9.1
Elevators . . . 9.1
Ailerons . . . 9.1
Rudder . . . 9.2
Secondary Flight Controls . . . 9.3
Trim Control, Trim Tabs . . . 9.3
High Lift Devices . . . 9.3
Control System Operation . . . 9.4
Mechanical Control . . . 9.4
Control Cables . . . 9.4
Bellcranks and Levers . . . 9.5
Jackscrews . . . 9.5
Torque Tubes . . . 9.6
Gust Locks and Gust Lock Systems . . . 9.6
Artificial Feel, Yaw Damper, Mach Trim, Rudder Limiter . . . 9.6
Artificial Feel . . . 9.6
Yaw Damper . . . 9.6
Mach Trim . . . 9.7
Rudder Limiter . . . 9.7
Stall Warning Systems . . . 9.7
Takeoff Configuration Warnings . . . 9.7
Landing Configuration Warnings . . . 9.7
Section B . . . 9.8
Active Load Control . . . 9.8
Hydraulic and Pneumatic Actuation Systems . . . 9.8
Hydromechanical Control . . . 9.8
Pneumatic Control . . . 9.9
Stall Protection Systems . . . 9.9
Section C . . . 9.9
Electric and Electronic Control . . . 9.9
Fly-By-Wire Control . . . 9.10
Fly-By-Optics Control . . . 9.10
Fly-By-Wireless Control . . . 9.10
Section D . . . 9.10
Static Balance . . . 9.10
Dynamic Balance . . . 9.11
Rebalancing . . . 9.11
Rebalancing Methods . . . 9.11
Aircraft Rigging . . . 9.11
Submodule 9 Practice Questions . . . 9.13
Submodule 9 Practice Answers . . . 9.14

11.10 FUEL SYSTEMS (ATA 28, ATA 47) . . . 10.1
Section A . . . 10.1
Fuel Systems . . . 10.1
Fuel System Layout . . . 10.1
Fuel Tanks . . . 10.1
Integral Fuel Tanks . . . 10.1
Bladder Fuel Tanks . . . 10.2
Fuel Supply Systems . . . 10.3
Fuel System Components . . . 10.4
Fuel Lines and Fittings . . . 10.4
Fuel Valves . . . 10.5
Manually Operated Gate Valves . . . 10.5
Motor Operated Valves . . . 10.6
Solenoid Operated Valves . . . 10.6
Fuel Pumps . . . 10.6
Centrifugal Boost Pumps . . . 10.7
Ejector Pumps . . . 10.7
Fuel Filters . . . 10.7
Fuel System Repairs . . . 10.8
Troubleshoot the Fuel System . . . 10.8
Location of Leaks and Defects . . . 10.9
Fuel Leak Classification . . . 10.9
Replacement of Gaskets, Sals, and Packings . . . 10.10
Section B . . . 10.10
Fuel Handling . . . 10.10
Cross-Feed and Transfer Systems . . . 10.10
Refueling and Defueling . . . 10.11
Fueling . . . 10.11
Over the Wing Fueling . . . 10.11
Pressure Refueling . . . 10.11
Defueling . . . 10.12
Fire Hazards when Fueling or Defueling . . . 10.12
Fuel Servicing and Contamination . . . 10.13
Fuel and Fuel system Contaminates . . . 10.13
Water . . . 10.13
Solid Particle Contaminates . . . 10.14
Surfactants . . . 10.14
Microorganisms . . . 10.14
Foreign Fuel Contamination . . . 10.14
Detection of Contaminates . . . 10.15
Fuel Contamination Control . . . 10.16
Section C . . . 10.17
Indications and Warning . . . 10.17
Fuel Quantity Indicating Systems . . . 10.17
Ratiometer Indicating Systems . . . 10.17
Capacitance Indicating Systems . . . 10.17
Mechanical Indicating Systems . . . 10.18
Fuel Flowmeters . . . 10.18
Fuel Temperature Gauges . . . 10.18
Fuel Heaters . . . 10.18
Fuel Pressure Gauges . . . 10.19
Pressure Warning Signal . . . 10.19
Valve In Transit Indicator Lights . . . 10.19
Section D . . . 10.21
Special Systems . . . 10.21
Dumping, venting, and draining . . . 10.21

TABLE OF CONTENTS

Fuel System Drains 10.21
Fuel Vent Systems 10.21
Fuel Jettisoning Systems 10.21
Inert Gas Systems 10.21
Section E 10.21
Longitudinal Balance Systems 10.21
Submodule 10 Practice Questions 10.23
Submodule 10 Practice Answers 10.24

11.11 HYDRAULIC POWER (ATA 29) 11.1
Section A 11.1
System Layout 11.1
Open Center Hydraulic Systems 11.2
Closed Center Hydraulic Systems 11.2
Evolution of Hydraulic Systems 11.3
Hydraulic Powerpack Systems 11.3
Modern High Performance Systems 11.3
Hydraulic Fluid Properties 11.3
Viscosity 11.3
Chemical Stability 11.3
Flash Point 11.4
Fire Point 11.4
Hydraulic Fluid Types 11.4
Mineral Based Fluids 11.4
Polyalphaolefin Based Fluids 11.4
Phosphate Ester Based Fluid (Skydrol©) 11.4
Intermixing of Fluids 11.4
Compatibility with Aircraft Materials 11.4
Hydraulic Fluid Contamination 11.4
Contamination Check 11.4
Sampling Schedule 11.5
Contamination Control 11.5
Filters 11.5
Hydraulic System Flushing 11.5
Health and Handling 11.5
Reservoirs and Accumulators 11.5
Reservoirs 11.5
Non-Pressurized Reservoirs 11.6
Pressurized Reservoirs 11.6
Air Pressurized Reservoirs 11.6
Fluid Pressurized Reservoirs 11.7
Reservoir Servicing 11.8
Accumulators 11.8
Types of Accumulators 11.9
Spherical Accumulators 11.9
Cylindrical Accumulators 11.9
Operation of Accumulators 11.9
Maintenance of Accumulators 11.10
Filters 11.10
Micron Type Filters 11.10
Maintenance of Filters 11.10
Filter Bypass Valves 11.11
Filter Differential Pressure Indicators 11.11
Heat Exchangers 11.11
Power Distribution 11.11
Shutoff Valves 11.12
Selector Valves 11.12
Check Valves 11.12
Orifice Type Check Valves 11.13
Sequence Valves 11.13
Priority Valves 11.14
Shuttle Valves 11.14
Quick Disconnect Valves 11.14
Hydraulic Fuses 11.14
Hydraulic Actuators 11.14
Linear Actuators 11.15
Rotary Actuators 11.15
Section B 11.16
System Operation 11.16
Pressure Generation: Electric and Mechanical 11.16
Hand Pumps 11.16
Powered Pump Classification 11.16
Constant Displacement Pumps 11.16
Gear Type Power Pump 11.17
Gerotor Pump 11.17
Piston Pumps 11.17
Vane Pump 11.17
Variable Displacement Pumps 11.18
Basic Pumping Operation 11.18
Pressure Control 11.19
Relief Valves 11.19
Pressure Regulators 11.20
Pressure Reducers 11.20
Hydraulic Seals 11.20
Packings 11.20
V-Rings 11.20
U-Rings 11.20
O-Rings 11.20
O-Ring Color Coding 11.21
Backup Rings 11.22
O-Ring Installation 11.22
Gaskets 11.22
Wipers 11.22
Hydraulic Indication and Warning 11.23
Servicing 11.24
Hydraulic Fluid Contamination 11.25
Contamination Prevention 11.26
Fluid Monitoring 11.26
Hydraulic System Maintenance & Troubleshooting Checklist 11.26
Section C 11.27
System Operation 11.27
Pressure Generation: Pneumatic 11.27
Emergency Pressure Generation 11.27
Ram Air Turbine 11.27
Hydraulic Motors 11.27
Power Transfer Unit (PTU) 11.28
Hydraulic Motor Driven Generators (HMDGS) 11.28
Interface with Other Systems 11.28
Submodule 11 Practice Questions 11.29
Submodule 11 Practice Answers 11.30

11.12 ICE AND RAIN PROTECTION (ATA 30) 12.1
Section A 12.1
Principles 12.1
Ice Formation 12.1
Icing Effects 12.1
Classification 12.2
Detection 12.2
Section B 12.3
De-icing 12.3
Anti-ice Versus De-ice 12.3
De-icing Systems 12.3
Electrical De-Icing Systems 12.3
Electric Propeller De-Ice 12.3
Electric Airfoil De-Ice Boots 12.3
Hot Air De-Ice/De-Fog 12.3
Pneumatic De-Ice Boots 12.4
Construction and Installation of De-Ice Boots 12.4
Sources of Operating Air 12.4
De-Ice system for Turboprop Aircraft 12.5
Inspection, Maintenance and Troubleshooting of Rubber De-Icer Boot Systems 12.6
Operational Checks 12.6
Adjustments 12.7
Troubleshooting 12.8
Inspection 12.8
De-Ice Boot Maintenance 12.8
Chemical De-Ice Systems 12.9
Windshield Chemical De-Ice 12.9
Propeller Chemical De-Ice 12.9
Ground Chemical De-Icing of Aircraft 12.9
Frost Removal 12.9
De-Icing Fluid 12.9
Holdover Time (HOT) 12.9
Critical Surfaces 12.10
Ice and Snow Removal 12.10
Probe and Drain Heating 12.11
Probe De-Ice/Anti-Ice 12.11
Water System and Drain De-Ice/Anti-Ice 12.12
Section C 12.12
Anti-icing 12.12
Thermal Electrical Anti-Icing 12.12
Windshield Anti-Ice 12.12
Propeller Anti-Ice 12.13
Thermal Pneumatic Anti-Ice 12.13
Wing Anti-Ice Systems (WAI) 12.13
Slat Leading Edges 12.14
WAI Operation 12.14
WAI Control 12.16
WAI Indication System 12.16
WAI System BITE Test 12.16
Engine Anti-Ice (EAI) 12.16
Chemical Anti-Ice 12.17
Wipers 12.17
Windshield Wiper Systems 12.18
Pneumatic Rain Removal Systems 12.18
Section E 12.18
Rain Repellent Systems 12.18
Chemical Rain Repellent 12.18
Windshield Surface Seal Coating 12.20
Submodule 12 Practice Questions 12.21
Submodule 12 Practice Answers 12.22

11.13 LANDING GEAR (ATA 32) 13.1
Section A 13.1
Description 13.1
Construction, Shock Absorbing 13.1
Landing Gear Configuration 13.1
Tail Wheel Type Landing Gear 13.1
Tandem Landing Gear 13.1
Tricycle Landing Gear 13.2
Fixed and Retractable Landing Gear 13.4
Landing Gear Alignment and Support 13.5
Alignment 13.5
Support 13.6
Shock Absorbing 13.7
Shock Struts 13.7
Shock Strut Operation 13.8
Servicing Shock Struts 13.10
Bleeding Shock Struts 13.10
Tires and Tubes 13.11
Tire Classification 13.11
Ply Rating 13.12
Tube Type or Tubeless 13.12
Bias Ply or Radial 13.12
Tire Construction 13.12
Bead 13.12
Carcass Plies 13.12
Tread 13.12
Sidewall 13.13
Chine 13.13
Tire Inspection on the Aircraft 13.14
Inflation 13.14
Tread Condition 13.14
Tread Depth and Wear Pattern 13.14
Tread Damage 13.15
Sidewall Condition 13.17
Tire Inspection Off the Aircraft 13.19
Tire Storage 13.19
Aircraft Tubes 13.19
Tube Construction and Selection 13.19
Tube Storage and Inspection 13.20
Tube Tire Inspection 13.20
Tire Mounting 13.20
Tubeless Tires 13.20
Tube Type Tires 13.21
Tire Balancing 13.22
Section B 13.23
Systems 13.23
Extension and Retraction Systems: Normal and Emergency 13.23
Normal Operation 13.23
Nose Wheel Centering 13.24
Emergency Operation 13.24

TABLE OF CONTENTS

Landing Gear Retraction Test . . . 13.24
Indications and Warnings . . . 13.25
Landing Gear Safety Devices . . . 13.25
Ground Locks . . . 13.25
Safety Switches . . . 13.26
Proximity Sensors . . . 13.26
Wheels, Brakes, Antiskid, and Autobraking . . . 13.26
Aircraft Wheels . . . 13.26
Wheel Construction . . . 13.26
Inboard Wheel Half . . . 13.27
Outboard Wheel Half . . . 13.28
Wheel Inspection . . . 13.28
On Aircraft Inspection . . . 13.28
Proper Installation . . . 13.29
Axle Nut Torque . . . 13.29
Off Aircraft Wheel Inspection . . . 13.29
Disassembly of the Wheel . . . 13.30
Cleaning the Wheel Assembly . . . 13.30
Inspection of the Wheel Halves . . . 13.30
Wheel Tie Bolt Inspection . . . 13.30
Key and Key Screw Inspection . . . 13.31
Fusible Plug Inspection . . . 13.31
Wheel Bearings . . . 13.31
Cleaning the Wheel Bearings . . . 13.31
Inspection of Wheel Bearings . . . 13.31
Bearing Handling and Lubrication . . . 13.33
Aircraft Brakes . . . 13.33
Types and Construction of Aircraft Brakes . . . 13.33
Single Disc Brakes . . . 13.33
Floating Disc Brakes . . . 13.34
Fixed Disc Brakes . . . 13.34
Dual Disc Brakes . . . 13.35
Multiple Disc Brakes . . . 13.36
Segmented Rotor Disc Brakes . . . 13.37
Carbon Brakes . . . 13.37
Brake Actuating Systems . . . 13.38
Independent Master Cylinders . . . 13.38
Boosted Brakes . . . 13.41
Power Brakes . . . 13.41
Brake Control Valve/Brake Metering Valve . . . 13.43
Emergency Brake Systems . . . 13.44
Parking Brake . . . 13.45
Brake Deboosters . . . 13.45
AntiSkid Systems . . . 13.46
System Operation . . . 13.46
Wheel Speed Sensors . . . 13.47
Control Units . . . 13.47
Antiskid Control Valves . . . 13.48
Touchdown and lock Wheel Protection . . . 13.48
Antiskid System Tests . . . 13.48
Ground Test . . . 13.48
Inflight Test . . . 13.49
Antiskid System Maintenance . . . 13.49
Wheel Speed Sensor . . . 13.49
Control Valve . . . 13.49
Control Unit . . . 13.49
Autobraking . . . 13.49
Brake Inspection and Service . . . 13.49
On Aircraft Servicing . . . 13.49
Lining Wear . . . 13.49
Air in the Brake System . . . 13.50
Bleeding Master Cylinder Brake Systems . . . 13.50
Bleeding Power Brake Systems . . . 13.51
Inspection For Leaks . . . 13.52
Proper Bolt Torque . . . 13.52
Off Aircraft Brake Maintenance . . . 13.52
Bolt and Threaded Connections . . . 13.52
Discs . . . 13.52
Automatic Adjuster Pins . . . 13.52
Torque Tube . . . 13.52
Brake Housing and Piston Condition . . . 13.53
Seal Condition . . . 13.53
Replacement of Brake Linings . . . 13.53
Brake Malfunctions and Damage . . . 13.53
Overheating . . . 13.53
Dragging . . . 13.53
Chattering or Squealing . . . 13.53
Steering . . . 13.54
Steering Damper . . . 13.54
Shimmy Dampers . . . 13.54
Piston Type . . . 13.54
Vane Type . . . 13.54
Non-Hydraulic Shimmy Damper . . . 13.55
Landing Gear System Maintenance . . . 13.55
Landing Gear Rigging and Adjustment . . . 13.56
Adjusting Landing Gear Latches . . . 13.56
Gear Door Clearances . . . 13.57
Drag and Side Brace Adjustment . . . 13.57
Section C . . . 13.57
Air-Ground Sensing . . . 13.57
Section D . . . 13.58
Tail Protection . . . 13.58
Skids . . . 13.58
Tail Stands . . . 13.59
Submodule 13 Practice Questions . . . 13.61
Submodule 13 Practice Answers . . . 13.62

11.14 LIGHTS . . . 14.1
External: Navigation, Anti-Collision, Landing, Taxiing, Ice . 14.1
Navigation/Position Lights . . . 14.1
Anti-Collision Lights . . . 14.2
Rotating Beacons . . . 14.2
Strobe Lighting . . . 14.2
Landing Lights . . . 14.3
Taxi Lights . . . 14.3
Wing Ice Inspection Lights . . . 14.3
Internal: Cabin, Cockpit, Cargo . . . 14.3
Cabin Lighting . . . 14.4
Cockpit Lighting . . . 14.4
Integral Instrument Lighting . . . 14.5
Cargo Compartment Lights . . . 14.5
Emergency Lighting . . . 14.5

Electroluminescence . . . 14.6
Self Illuminating Signs . . . 14.6
Emergency Exit Lighting Activation . . . 14.6
Submodule 14 Practice Questions . . . 14.7
Submodule 14 Practice Answers . . . 14.8

11.15 OXYGEN (ATA 35) . . . 15.1
Human Respiration and Circulation . . . 15.1
Sources, Storage, Charging and Distribution . . . 15.2
Sources of Oxygen . . . 15.2
Gaseous Oxygen Tanks . . . 15.2
Chemical and Solid Oxygen . . . 15.2
Onboard Oxygen Generating Systems . . . 15.3
Liquid Oxygen . . . 15.3
Oxygen Charging . . . 15.3
Oxygen Distribution . . . 15.4
Supply Regulation . . . 15.5
Continuous Flow Systems . . . 15.5
Cabin Continuous Flow Systems . . . 15.5
Demand Flow Systems . . . 15.6
Diluter-Demand . . . 15.7
Pressure Demand . . . 15.8
Cockpit Demand Systems . . . 15.8
Chemical Oxygen Systems . . . 15.8
Electronic Pulse Demand Systems . . . 15.9
Indication and Warnings . . . 15.9
Oxygen System Maintenance . . . 15.10
Leak Testing Gaseous Oxygen Systems . . . 15.10
Draining an Oxygen System . . . 15.11
Purging an Oxygen System . . . 15.11
Inspection of Masks and Hoses . . . 15.11
Replacement of Tubing, Valves, and Fittings . . . 15.12
Oxygen System Safety . . . 15.12
Submodule 15 Practice Questions . . . 15.13
Submodule 15 Practice Answers . . . 15.14

11.16 PNEUMATIC/VACUUM (ATA 36) . . . 16.1
Section A . . . 16.1
Pneumatic Systems . . . 16.1
High-pressure Pnuematic Systems . . . 16.1
System Layout . . . 16.1
System Components . . . 16.1
Air Compressors . . . 16.1
Relief Valves . . . 16.1
Control Valves . . . 16.1
Check Valves . . . 16.2
Restrictors . . . 16.2
Variable Restrictor . . . 16.2
Filters . . . 16.3
Desiccant/Moisture Separator . . . 16.3
Chemical Drier . . . 16.3
Sources . . . 16.3
Storage . . . 16.3
Charging . . . 16.3
Distribution . . . 16.3
Supply Regulation . . . 16.4
Emergency Back-up Systems and Pneudraulics . . . 16.4
Nitrogen Bottles . . . 16.4
High-pressure Pneumatic System Maintenance . . . 16.4
Medium Pressure Pneumatic Systems . . . 16.4
System Layout . . . 16.4
Sources . . . 16.4
Storage . . . 16.4
Pressure Control . . . 16.5
Distribution . . . 16.5
Vaccuum Systems . . . 16.5
Indications and Warnings . . . 16.5
Interface with Other Systems . . . 16.6
Section B . . . 16.6
Pumps . . . 16.6
Pressure and Vacuum Pumps . . . 16.6
Classification of Pumps . . . 16.6
Types of Pumps . . . 16.6
Vane Pump, Wet and Dry Types . . . 16.6
Piston Pump . . . 16.7
Turbine Engine Compressor . . . 16.7
Roots Type Blower . . . 16.8
Vacuum Pumps . . . 16.8
Submodule 16 Practice Questions . . . 16.9
Submodule 16 Practice Answers . . . 16.10

11.17 WATER/WASTE (ATA 38) . . . 17.1
Section A . . . 17.1
Water/Waste Systems . . . 17.1
Water System Layout . . . 17.1
Water Supply . . . 17.1
Water Distribution . . . 17.2
Water System Servicing . . . 17.2
Water System Draining . . . 17.3
Toilet System Layout . . . 17.3
Flushing . . . 17.3
Lavatory Layout . . . 17.5
Servicing Lavatories . . . 17.5
Section B . . . 17.6
Corrosion . . . 17.6
Submodule 17 Practice Questions . . . 17.7
Submodule 17 Practice Answers . . . 17.8

11.18 ONBOARD MAINTENANCE SYSTEMS (ATA 45) . . . 18.1
Central Maintenance Computers . . . 18.1
BITE . . . 18.3
Data Loading Systems . . . 18.3
Electronic Library System . . . 18.3
Printing . . . 18.4
Structure Monitoring . . . 18.4
Submodule 18 Practice Questions . . . 18.5
Submodule 18 Practice Answers . . . 18.6

11.19 INTEGRATED MODULAR AVIONICS (IMA) (ATA 42) . . . 19.1
Section A . . . 19.1
Integration of Avionics . . . 19.1
Digital Data Buses Reduce Wiring . . . 19.2

TABLE OF CONTENTS

Core Systems 19.3
Common Core Systems Concepts 19.3
Network Components 19.3
Section B 19.4
Typical System Layout 19.4
Boeing 777 Airplane Information Management System 19.4
Submodule 19 Practice Questions 19.7
Submodule 19 Practice Answers 19.8

11.20 CABIN SYSTEMS (ATA 44) 20.1
Introduction 20.1
System Architecture, Operation and Control 20.1
In Flight Entertainment (IFE) 20.2
IFE Server 20.3
External Communication Systems 20.3
Wi-Fi Access 20.3
Flight Attendant's Panel 20.4
Director Interface Board 20.4
Cabin Network Server Interface and Hosting 20.4
Cabin Mass Memory Systems 20.4
Cabin Core Systems 20.5
Submodule 20 Practice Questions 20.7
Submodule 20 Practice Answers 20.8

11.21 INFORMATION SYSTEMS (ATA 46) 21.1
Aircraft Information System 21.1
System Architecture, Operation and Control 21.2
The Airbus System 21.2
Network Server System (NSS) 21.2
Secure Communication Interface 21.2
Central Data Acquisition Module (CDAM) 21.2
Data Loading And Configuration Systems 21.2
Flight Deck Information System: Electronic Flight Bag 21.2
Boeing 777 EFB 21.2
Maintenance Information System 21.3
Passenger Cabin Information System 21.3
Miscellaneous Information System 21.3
Submodule 21 Practice Questions 21.5
Submodule 21 Practice Answers 21.6

Acronym Definitions A.1

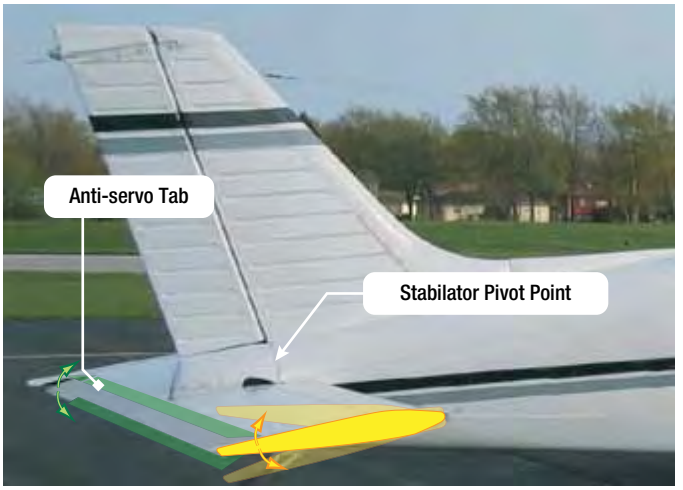

Figure 1-28. An Anti-servo tab moves in the same direction as the control tab. Shown here on a stabilator, it desensitizes the pitch control.

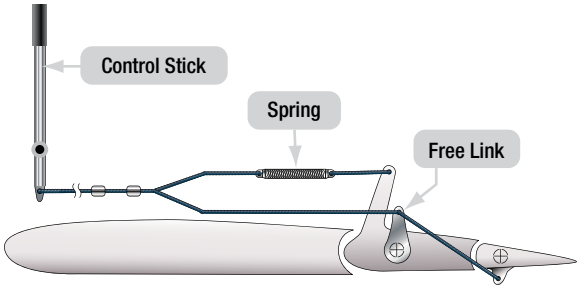

Figure 1-29. Many tab linkages have a spring tab that kicks in as the forces needed to deflect a control increase with speed and the angle of desired deflection.

MASS BALANCE

Flutter is an undesirable oscillation of an aircraft control surface which can have catastrophic effect on controllability of the aircraft. The center of lift on a control surface should be aft of the control surface center of gravity to prevent control surface flutter. Often, the addition of weight to the forward surface of an aileron is sufficient to move the CG of the airfoil forward and prevent flutter. Some aircraft designs place the weight on a lever arm that extends forward of the control surface. This is known as a mass balance. Mass balances help prevent flutter and also reduce the required control stick pressure used to move a control surface. [**Figure 1-30**]

Figure 1-30. An aileron mass balance.

AERODYNAMIC BALANCE PANELS

Figure 1-31 shows another way of assisting the movement of an aileron on a large aircraft. It is called an aileron balance panel. Not visible when approaching the aircraft, it is positioned in the linkage that hinges the aileron to the wing. Balance panels have been constructed typically of aluminum skin covered frame assemblies or aluminum honeycomb structures. The trailing edge of the wing just forward of the leading edge of the aileron is sealed to allow controlled airflow in and out of the hinge area where the balance panel is located.

WING FENCES

A chordwise barrier on the upper surface of the wing, called a wing fence or stall fence, is used to halt the spanwise flow of air along the wing. During low speed flight, this can maintain proper chordwise airflow reducing the tendency for the wing to stall. [**Figure 1-32**]

SAW TOOTH LEADING EDGE

A few aircraft have a sawtooth leading edge where, rather than being a smooth continuous surface, the leading edge juts out slightly at a point(s) determined to be beneficial by design engineers. The purpose of the sawtooth wing is to utilize the vortex created by an inboard section of the wing to improve boundary layer flow over an outboard section. This increases lift and resistance to stall. Sawtooth wing leading edges are most common on high performance military aircraft.

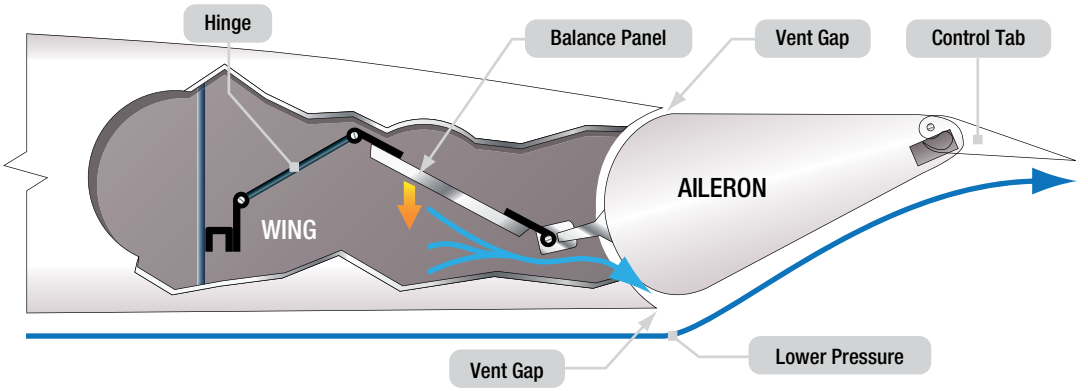

Figure 1-31. An aileron balance panel and linkage uses varying air pressure to assist in control surface positioning.

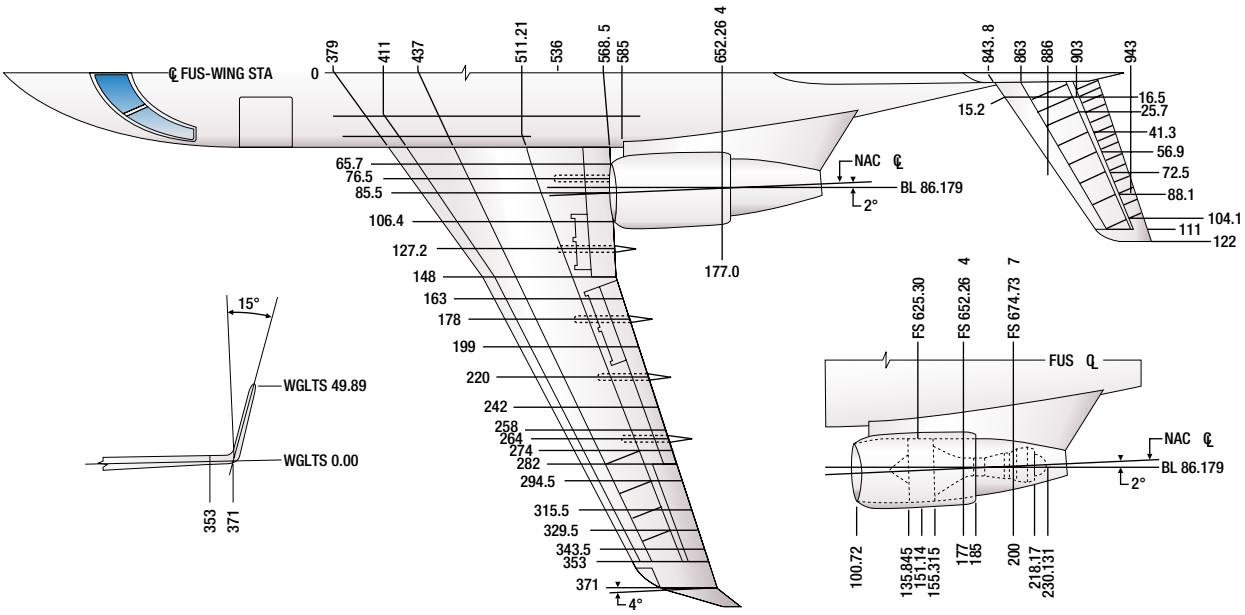

Figure 2-4. Wing stations are often referenced off the butt line, which bisects the center of the fuselage longitudinally. Horizontal stabilizer stations referenced to the butt line and engine nacelle stations are also shown.

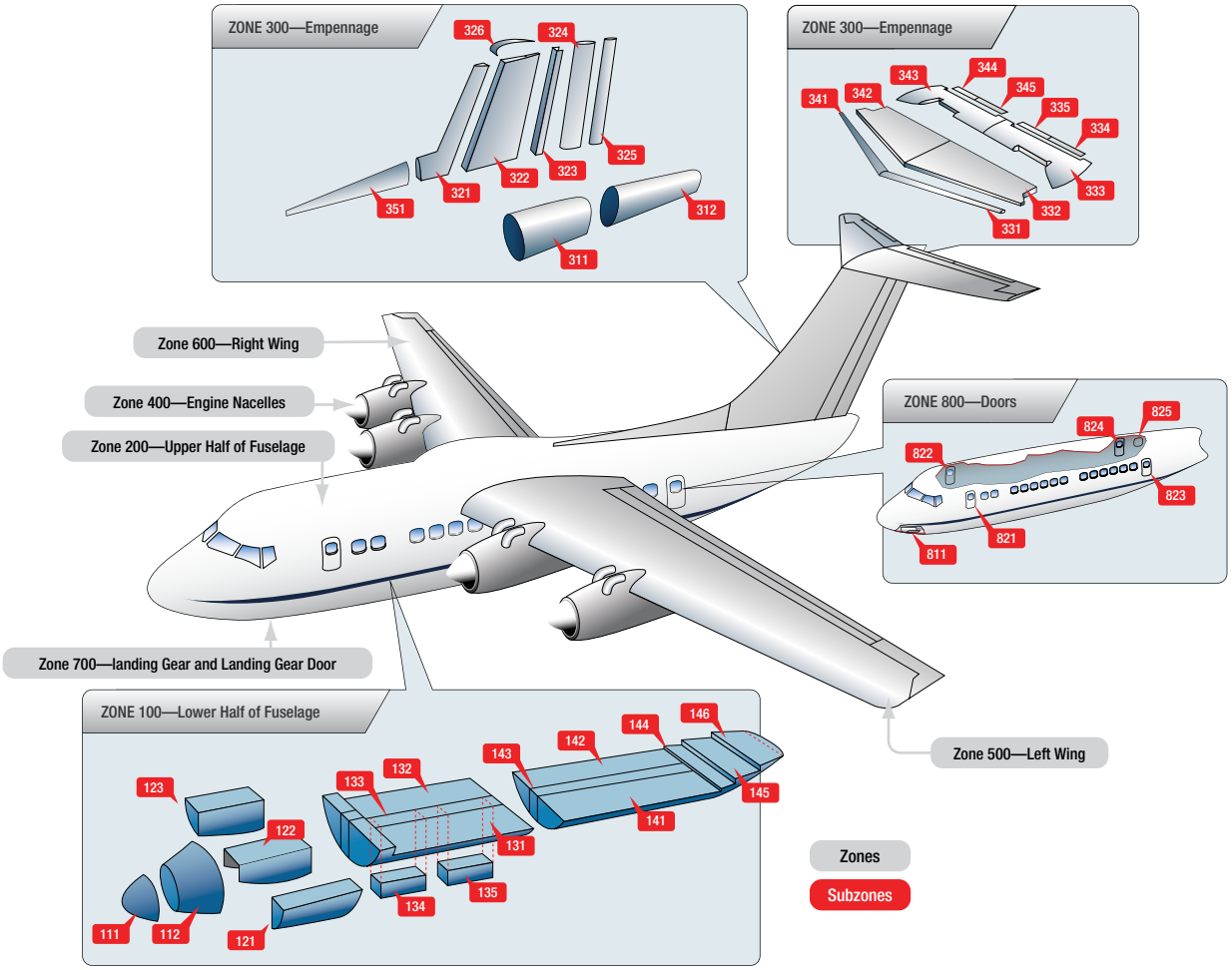

Figure 2-5. Large aircraft are divided into zones and sub zones for identifying the location of various components.

DOUBLERS

A simpler way to reinforce an area of skin on the aircraft which receives greater loads than can easily be carried by a single sheet of material is to create a doubler for that area. A doubler is simply a second, reinforcing layer of skin material used to strengthening the load caring capacity of the skin. It has the advantage of being inexpensive and is able to be shaped for a specific area identified as needing reinforcement.

STRUTS & TIES

A strut is a bar or rod shaped reinforcement designed to resist compression loads. A tie is a rod or beam designed to take a tensile load. Both are used as needed to reinforce the aircraft structure throughout the fuselage to carry the loads experienced

BEAMS AND FLOOR STRUCTURE

In addition to the structural members previously mentioned, additional beams, floor structural members and various other reinforcement members are also used to construct an aircraft. A beam may be installed laterally or longitudinally. Beams typically support the floor of the flight deck and the passenger compartment. They are situated to provide secure attachment of the floor panels and also the seats tracks into which the passenger seats are secured. The floor itself is typically made up of numerous honeycomb constructed panels that are screwed to the floor support structure. Flight deck floor panels may be constructed from sheet metal. [**Figure 2-15**]

REINFORCEMENT

Fuselage structural reinforcement can be accomplished in several ways. As mentioned above doublers are a frequently used method of reinforcing sections of skin, such as where the attachment points of doors and other breaks in the fuselage occur. In some cases, rather than a doubler patch, the aircraft skin is machined in various thicknesses with thinner and lighter sections in low stress locations and a thicker section where reinforcement is needed.

Other methods include channel members, hat shaped sections and other built up assemblies which can be inserted to give additional strength. These devices can be installed in various points to attach fittings, engine mounts, wing and empennage attachments and landing gear.

SKINNING

Attached to the outside of the aircraft structure is the aircraft skin, be it stressed or not. Simple, light aircraft generally have skin made from sheet aluminum which is formed to fit, wrapped and riveted to the structural members. Larger, more complex and heavier aircraft used heavier material to form the aircraft skin. This is to transfer and carry the greater loads experience during high performance flight. Some simple sheet metal skin may be found. However, various skin thickness are used to meet the design loads which vary by location around the aircraft.

Since in many areas the skin thickness varies, machining the skin, including integrally formed stringers and risers, from a solid billet of material has become a standard practice. By milling the skin out of a single piece of material, the skin thickness may be varied precisely to meet design requirements. Maximum strength

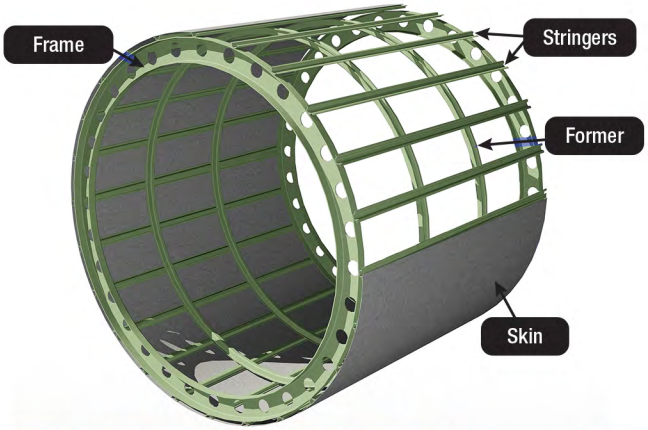

Figure 2-13. The frame, former, and stringer components of a fuselage.

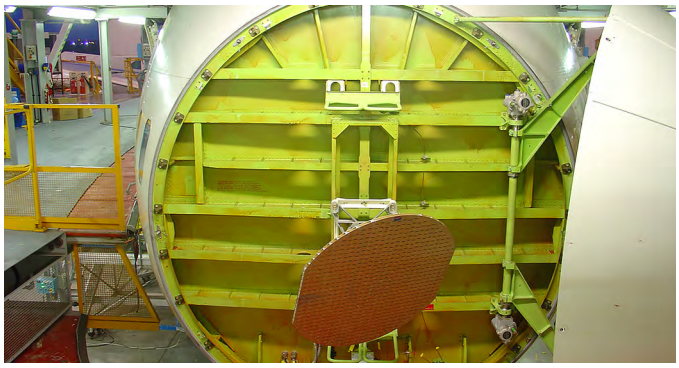

Figure 2-14. Forward bulkhead of a Boeing 747.

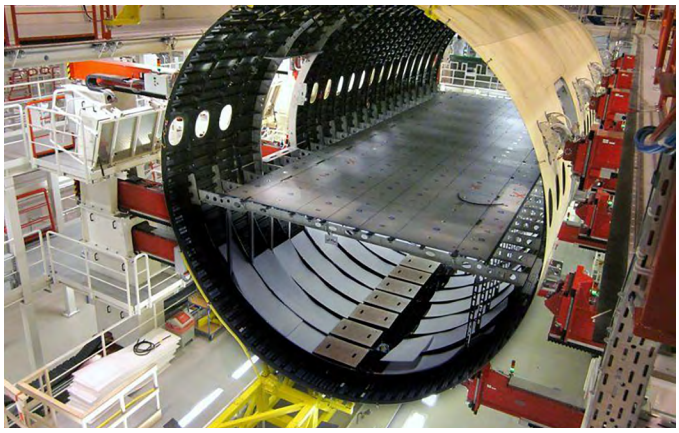

Figure 2-15. Floor installation on an Airbus A-350.

Small aircraft usually have fixed pegs or blocks attached to the fuselage parallel to or coincident with the datum lines. A spirit level and a straight edge are rested across the pegs or blocks to check the level of the aircraft. This method of checking aircraft level also applies to many of the larger types of aircraft. However, the grid method is sometimes used on large aircraft. The grid plate is a permanent fixture installed on the aircraft floor or supporting structure.

When the aircraft is to be leveled, a plumb bob is suspended from a predetermined position in the ceiling of the aircraft over the grid plate. The adjustments to the jacks necessary to level the aircraft are indicated on the grid scale. The aircraft is level when the plumb bob is suspended over the center point of the grid. [**Figure 2-23**]

Certain precautions must be observed in all instances when jacking an aircraft. Normally, rigging and alignment checks should be performed in an enclosed hangar. If this cannot be accomplished, the aircraft should be positioned with the nose into the wind. The weight and loading of the aircraft should be exactly as described in the manufacturer's manual. In all cases, the aircraft should not be jacked until it is determined that the maximum jacking weight (if applicable) specified by the manufacturer is not exceeded.

With a few exceptions, the dihedral and the incidence angles of most conventional modern aircraft cannot be adjusted. Some manufacturers permit adjusting the wing angle of incidence to correct for a wing heavy condition. The dihedral and incidence angles should be checked after hard landings or after experiencing abnormal flight loads to ensure that the components are not distorted and that the angles are within the specified limits.

There are several methods for checking structural alignment and rigging angles. Special rigging boards that incorporate, or on which can be placed, a special instrument (spirit level or inclinometer) for determining the angle are used on some aircraft. On a number of aircraft, the alignment is checked using a transit and plumb bobs or a theodolite and sighting rods. The particular equipment to use is usually specified in the manufacturer's maintenance manual.

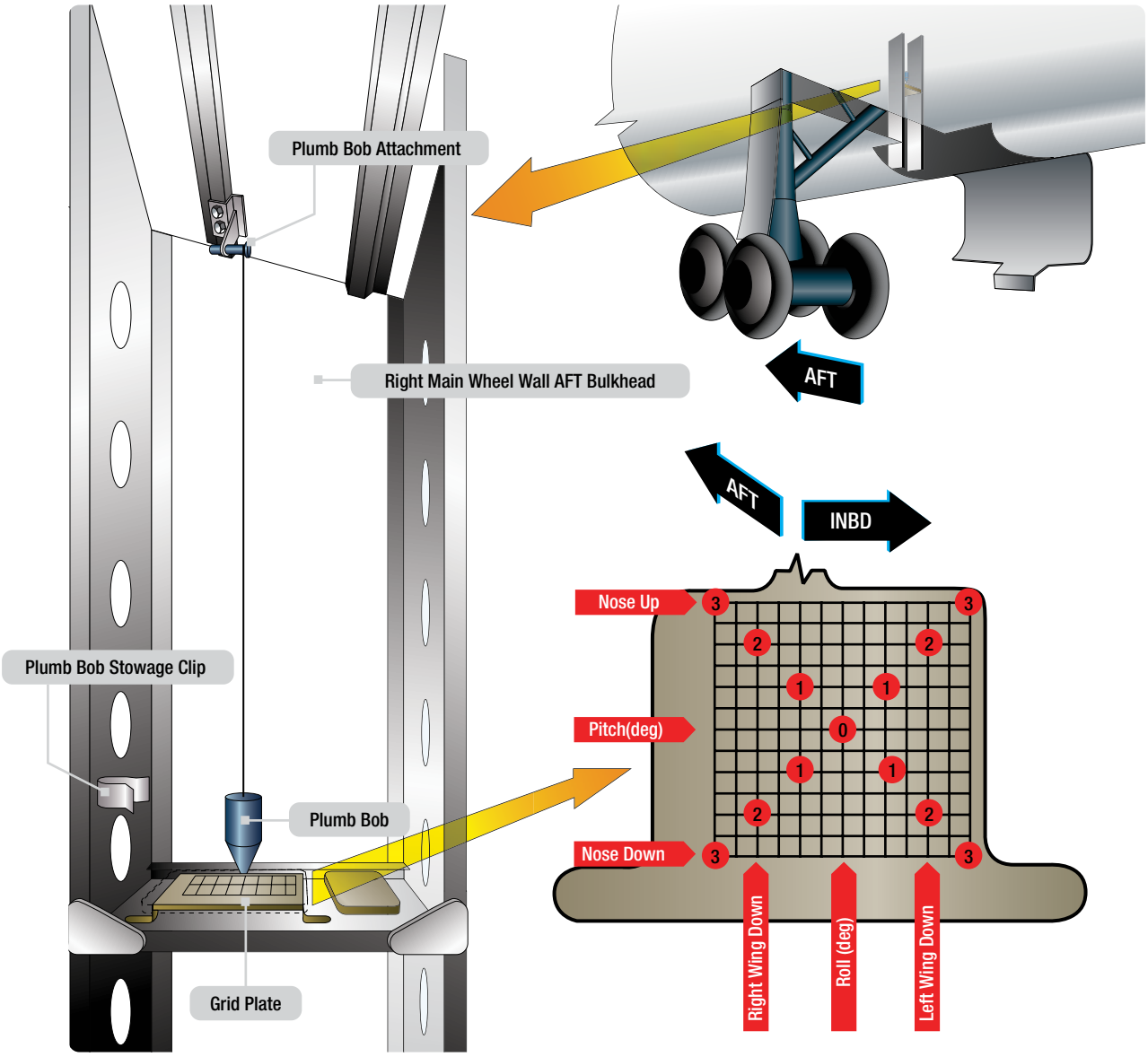

Figure 2-23. Grid plate installed.

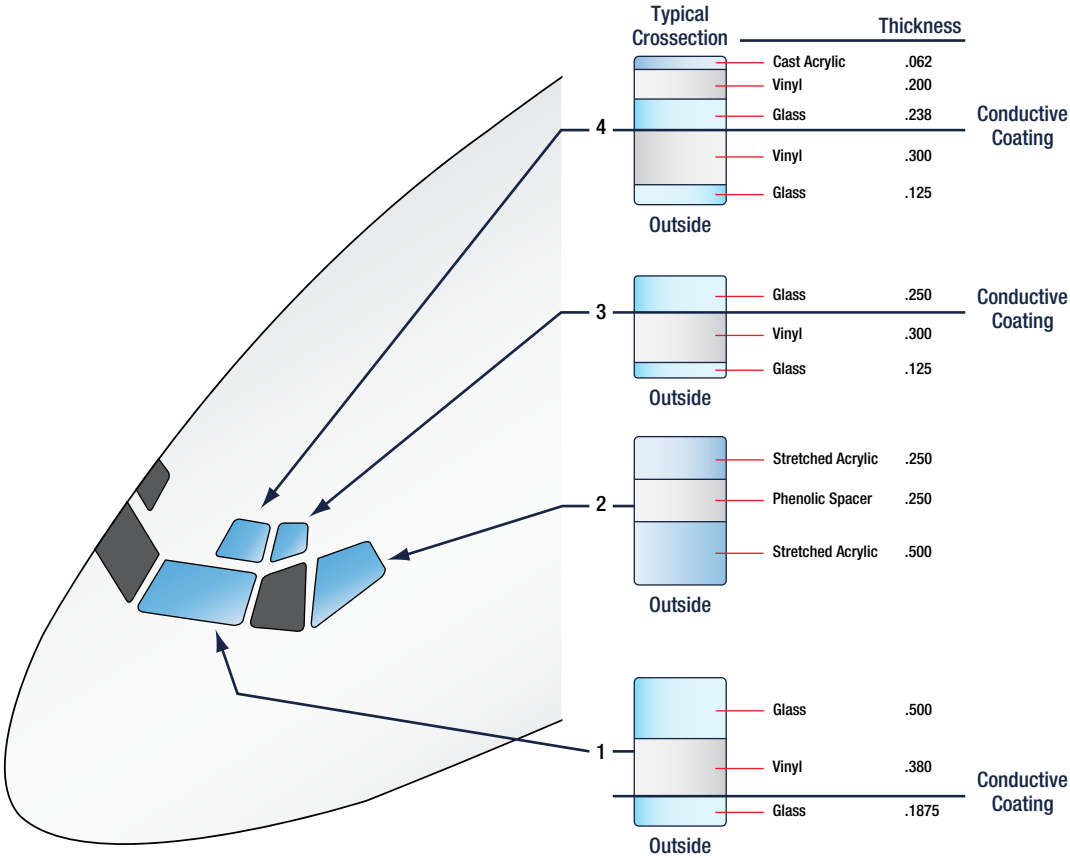

Figure 3-4. Flight deck window laminations.

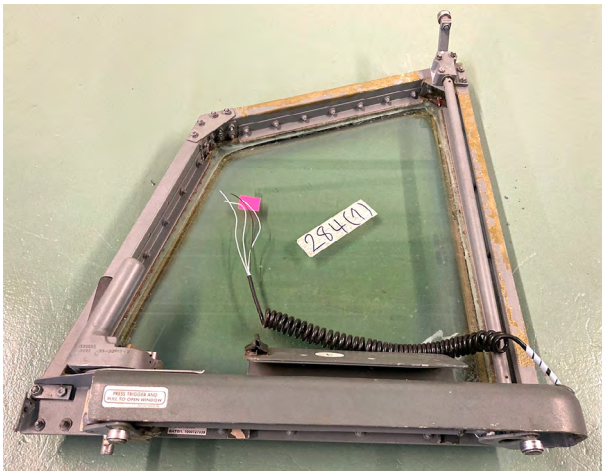

Figure 3-5. A Boeing 737 sliding window assembly.

WINDSCREENS

Windscreens are used in passenger transport aircraft to block weather from entering the cabin when an entry or service door is opened. They are made of strong, lightweight partitions of honeycomb construction. Some cabin windscreens incorporate storage compartments. Windscreens use the longitudinal seat track installed on the cabin floor for attachment. Support is also given by attachment to a ceiling or wall bracket. [**Figure 3-7**]

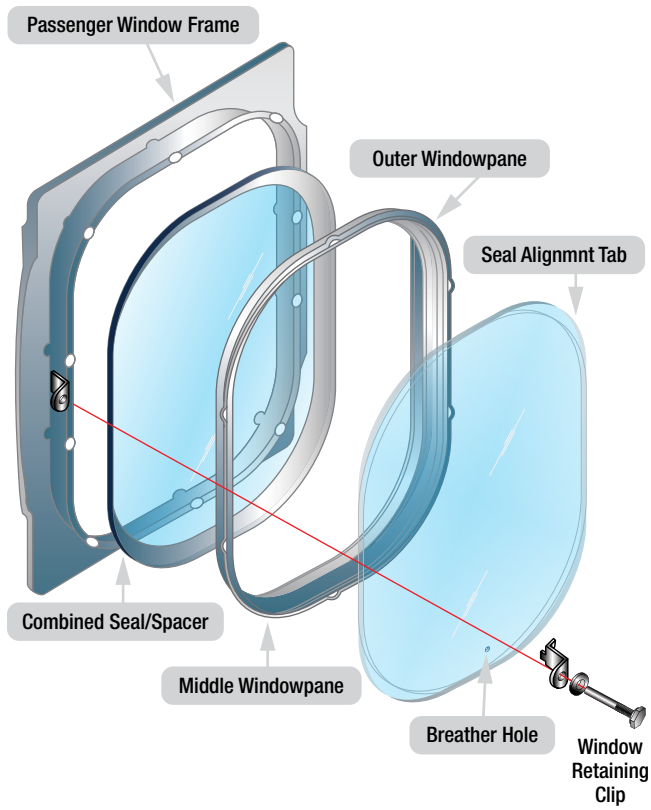

Figure 3-6. Middle and outer passenger cabin windows, seal and window frame.