U.S. Department
of Transportation

**Federal Aviation
Administration**

Advisory Circular

AC 43.13-1B
Change 1
Editorial Update May 2024

Acceptable Methods, Techniques, and Practices - Aircraft Inspection and Repair

September 8, 1998
Change 1 incorporated September 27, 2001

Note: Advisory Circular 43.13-2B for Aircraft Alteration begins immediately following the end pages of AC 43.13-1B.

DEPARTMENT OF TRANSPORTATION
FEDERAL AVIATION ADMINISTRATION
Flight Standard Service

AIRCRAFT TECHNICAL BOOK COMPANY
www.actechbooks.com

CONTENTS

Paragraph Page

CHAPTER 1. WOOD STRUCTURE 1-1

SECTION 1. MATERIALS AND PRACTICES 1-1

1-1. GENERAL 1-1
1-2. WOODS 1-1
1-3. MODIFIED WOOD PRODUCTS 1-5
1-4. ADHESIVES 1-5
1-5. BONDING PRECAUTIONS 1-7
1-6. PREPARATION OF WOOD SURFACES FOR BONDING 1-7
1-7. APPLYING THE ADHESIVE 1-8
1-8. ASSEMBLY TIME IN BONDING 1-8
1-9. BONDING TEMPERATURE 1-9
1-10. CLAMPING PRESSURE 1-9
1-11. METHOD OF APPLYING PRESSURE 1-9
1-12.–1-17. [RESERVED.] 1-10

SECTION 2. HEALTH AND SAFETY 1-11

1-18. GENERAL 1-11
1-19. SANDING IN AREAS OF EXISTING BOND JOINTS AND FINISHES 1-11
1-20. HANDLING OF ADHESIVES AND FINISHES 1-11
1-21.–1-26. [RESERVED.] 1-11

SECTION 3. INSPECTION 1-12

1-27. GENERAL 1-12
1-28. TYPES OF DETERIORATION AND DAMAGE 1-12
1-29. INSPECTION METHODS 1-12
1-30.–1-35. [RESERVED.] 1-15

SECTION 4. REPAIRS 1-16

1-36. GENERAL 1-16
1-37. REPLACEMENT OF DRAIN HOLES AND SKIN STIFFENERS 1-16
1-38. CONTROL SURFACE FLUTTER PRECAUTIONS 1-16
1-39. SCARF JOINTS 1-16
1-40. SPLICING OF SPARS 1-17
1-41. SPAR REPLACEMENT 1-22
1-42. SPLICING OF BOX SPAR WEBS 1-23
1-43. REPLACING SOLID-TYPE SPARS WITH LAMINATED-TYPE SPARS 1-23
1-44. SPAR LONGITUDINAL CRACKS AND LOCAL DAMAGE 1-23
1-45. ELONGATED HOLES IN SPARS 1-25
1-46. RIB REPAIRS 1-25
1-47. PLYWOOD SKIN REPAIR 1-28

1-48. DETERMINATION OF SINGLE OR DOUBLE CURVATURE 1-29
1-49. REPAIRS TO SINGLE CURVATURE PLYWOOD SKIN 1-29
1-50. REPAIRS TO DOUBLE CURVATURE PLYWOOD SKIN 1-30
1-51. TYPES OF PATCHES 1-30
1-52. FABRIC PATCH 1-38
1-53.–1-63. [RESERVED.] 1-38

SECTION 5. FINISHING WOOD STRUCTURES 1-39

1-64. GENERAL 1-39
1-65. ACCEPTABLE FINISHES 1-39
1-66. PRECAUTIONS 1-39
1-67. FINISHING OF INTERIOR SURFACES 1-40
1-68. FINISHING OF EXTERIOR SURFACES 1-40
1-69. FINISHING OF END GRAIN SURFACES 1-40
1-70. FINISHING WITH FABRIC OR TAPE 1-41
1-71. SEALING OF BOLT HOLES 1-41
1-72.–1-79. [RESERVED.] 1-41

CHAPTER 2. FABRIC COVERING 2-1

SECTION 1. PRACTICES AND PRECAUTIONS 2-1

2-1. GENERAL 2-1
2-2. PROBLEM AREAS 2-1
2-3. AIRCRAFT FABRIC-SYNTHETIC 2-1
2-4. AIRCRAFT FABRIC-NATURAL 2-2
2-5. RECOVERING AIRCRAFT 2-3
2-6. PREPARATION OF THE STRUCTURE FOR COVERING 2-4
2-7. FABRIC SEAMS 2-6
2-8. COVERING METHODS 2-10
2-9. REINFORCING TAPE 2-11
2-10. LACING 2-12
2-11. STITCH SPACING 2-22
2-12. FASTENERS 2-23
2-13. FINISHING TAPE 2-24
2-14. INSPECTION RINGS AND DRAIN GROMMETS 2-25
2-15.–2-19. [RESERVED.] 2-26

SECTION 2. APPLICATION OF DOPE 2-27

2-20. GENERAL 2-27
2-21. DOPE APPLICATION PROCEDURE (Natural Fabrics) 2-29
2-22. COVERING OVER PLYWOOD 2-31
2-23. COATING APPLICATION DEFECTS 2-32
2-24.–2-29. [RESERVED.] 2-33

SECTION 3. INSPECTION AND TESTING 2-34

2-30. GENERAL 2-34
2-31. FABRIC IDENTIFICATION 2-35
2-32. COATING IDENTIFICATION 2-36
2-33. STRENGTH CRITERIA FOR AIRCRAFT FABRIC 2-36
2-34. FABRIC TESTING 2-36
2-35. REJUVENATION OF THE DOPE FILM 2-37
2-36.–2-41. [RESERVED.] 2-37

SECTION 4. REPAIRS TO FABRIC COVERING 2-38

2-42. GENERAL 2-38
2-43. REPAIR OF TEARS AND ACCESS OPENINGS 2-38
2-44. SEWN-PATCH REPAIR 2-40
2-45. DOPED-ON PATCH REPAIR 2-41
2-46.–2-51. [RESERVED.] 2-42

CHAPTER 3. FIBERGLASS AND PLASTICS 3-1

SECTION 1. REPAIR OF LIGHT LOAD LAMINATE STRUCTURES 3-1

3-1. GENERAL 3-1
3-2. FIBERGLASS LAMINATE REPAIRS 3-1
3-3. REPAIRING HOLES 3-4
3-4. SAMPLE BAGGING AND CURING PROCESS 3-10
3-5.–3-9. [RESERVED.] 3-12

SECTION 2. METALLIC SANDWICH SECONDARY STRUCTURE REPAIRS 3-13

3-10. REPAIRS TO METALLIC SANDWICH SECONDARY STRUCTURE 3-13
3-11. FINISHING 3-19
3-12.–3-17. [RESERVED.] 3-19

SECTION 3. TRANSPARENT PLASTICS 3-20

3-18. GENERAL 3-20
3-19. STORAGE AND HANDLING 3-20
3-20. FORMING PROCEDURES AND TECHNIQUES 3-20
3-21. HEATING 3-21
3-22. FORMS 3-22
3-23. FORMING METHODS 3-22
3-24. REPAIR OF PLASTICS 3-26
3-25. CLEANING AND POLISHING TRANSPARENT PLASTIC 3-29
3-26. REPLACEMENT PANELS 3-29
3-27. INSTALLATION PROCEDURES 3-29
3-28.–3-39. [RESERVED.] 3-30

SECTION 4. WINDSHIELDS, ENCLOSURES, AND WINDOWS 3-31

3-40. GENERAL 3-31
3-41. PROTECTION 3-32
3-42. WINDSHIELD INSTALLATION 3-32
3-43.–3-47. [RESERVED.] 3-33

CHAPTER 4. METAL STRUCTURE, WELDING, AND BRAZING 4-1

SECTION 1. IDENTIFICATION OF METALS 4-1

4-1. GENERAL 4-1
4-2. IDENTIFICATION OF STEEL STOCK 4-1
4-3. INTERCHANGEABILITY OF STEEL TUBING 4-3
4-4. IDENTIFICATION OF ALUMINUM 4-3
4-5.–4-15. [RESERVED.] 4-5

SECTION 2. TESTING OF METALS 4-6

4-16. HARDNESS TESTING 4-6
4-17. ROCKWELL HARDNESS TEST 4-6
4-18. BRINELL HARDNESS TEST 4-7
4-19. VICKERS HARDNESS TEST 4-8
4-20. MICROHARDNESS TESTING 4-9
4-21. INDENTATIONS 4-10
4-22. MAGNETIC TESTING 4-10
4-23. ALUMINUM TESTING 4-10
4-24.–4-35. [RESERVED.] 4-11

SECTION 3. PRECAUTIONARY MEASURES 4-12

4-36. FLUTTER AND VIBRATION PRECAUTIONS 4-12
4-37. LOAD FACTORS FOR REPAIRS 4-13
4-38. TRANSFER OF STRESSES WITHIN A STRUCTURE 4-13
4-39.–4-49. [RESERVED.] 4-13

SECTION 4. METAL REPAIR PROCEDURES 4-14

4-50. GENERAL 4-14
4-51. RIVETED (OR BOLTED) STEEL TRUSS-TYPE STRUCTURES 4-14
4-52. ALUMINUM ALLOY STRUCTURES 4-14
4-53. SELECTION OF ALUMINUM FOR REPLACEMENT PARTS 4-15
4-54. HEAT TREATMENT OF ALUMINUM ALLOY PARTS 4-16
4-55. BENDING METAL 4-16
4-56. SETBACK 4-16
4-57. RIVETING 4-19
4-58. REPAIR METHODS AND PRECAUTIONS FOR ALUMINUM STRUCTURE 4-33

4-59. REPAIRING CRACKED MEMBERS 4-49
4-60. STEEL AND ALUMINUM FITTINGS 4-55
4-61. CASTINGS 4-56
4-62. SELECTIVE PLATING IN AIRCRAFT MAINTENANCE 4-57
4-63.–4-73. [RESERVED.] 4-62

SECTION 5. WELDING AND BRAZING 4-63

4-74. GENERAL 4-63
4-75. EQUIPMENT SELECTION 4-64
4-76. ACCURATELY IDENTIFY THE TYPE OF MATERIAL TO BE REPAIRED 4-64
4-77. PREPARATION FOR WELDING 4-65
4-78. INSPECTION OF A COMPLETED WELD 4-65
4-79. MICROFISSURES 4-65
4-80. NONDESTRUCTIVE TESTING 4-66
4-81. PRACTICES TO GUARD AGAINST 4-66
4-82. TORCH SIZE (Oxyacetylene welding) 4-66
4-83. WELDING RODS AND ELECTRODES 4-66
4-84. ROSETTE WELDS 4-67
4-85. HEAT-TREATED MEMBERS 4-67
4-86. TYPES OF WELDING 4-68
4-87. ELECTRIC-RESISTANCE WELDING 4-70
4-88. BRAZING 4-71
4-89. AIRCRAFT PARTS NOT TO BE WELDED 4-75
4-90. WELDING ROD SELECTION 4-75
4-91. REPAIR OF TUBULAR MEMBERS 4-76
4-92. REPAIR BY WELDED SLEEVE 4-77
4-93. REPAIR BY BOLTED SLEEVE 4-79
4-94. WELDED-PATCH REPAIR 4-79
4-95. SPLICING TUBING BY INNER-SLEEVE METHOD 4-79
4-96. SPLICING TUBING BY OUTER-SLEEVE METHOD 4-80
4-97. SPLICING USING LARGER DIAMETER REPLACEMENT TUBES 4-83
4-98. REPAIRS AT BUILT-IN FUSELAGE FITTINGS 4-84
4-99. ENGINE-MOUNT REPAIRS 4-86
4-100. BUILT-UP TUBULAR WING OR TAIL-SPARS 4-86
4-101. WING-BRACE STRUTS AND TAIL-BRACE STRUTS 4-90
4-102. LANDING GEAR REPAIR 4-91
4-103. REPAIRS TO WELDED ASSEMBLIES 4-92
4-104. STAINLESS STEEL STRUCTURE 4-93
4-105.–4-110. [RESERVED.] 4-93

SECTION 6. WELDING AND BRAZING SAFETY 4-94

4-111. GENERAL 4-94
4-112. FIRE AND EXPLOSION SAFETY 4-94
4-113. WELDING WORK AREA 4-94

4-114. FIRE PROTECTION 4-95
4-115. PROTECTIVE APPAREL 4-95
4-116. FIRST-AID KITS 4-96
4-117.–4-128. [RESERVED.] 4-96

CHAPTER 5. NONDESTRUCTIVE INSPECTION (NDI) 5-1

SECTION 1. GENERAL 5-1

5-1. GENERAL 5-1
5-2. APPROVED PROCEDURES 5-1
5-3. NDT LEVELS 5-1
5-4. TRAINING, QUALIFICATION, AND CERTIFICATION 5-2
5-5. FLAWS 5-2
5-6. SELECTING THE NDI METHOD 5-6
5-7. TYPES OF INSPECTIONS 5-8
5-8.–5-14. [RESERVED.] 5-8

SECTION 2. VISUAL INSPECTION 5-9

5-15. GENERAL 5-9
5-16. SIMPLE VISUAL INSPECTION AIDS 5-9
5-17. BORESCOPES 5-10
5-18. VISUAL INSPECTION PROCEDURES 5-11
5-19.–5-24. [RESERVED.] 5-13

SECTION 3. EDDY CURRENT INSPECTION 5-14

5-25. EDDY CURRENT INSPECTION 5-14
5-26. EDDY CURRENT COILS AND PROBES 5-15
5-27. FIELD APPLICATION OF EDDY CURRENT INSPECTION 5-16
5-28. SURFACE INSPECTION 5-16
5-29. SUBSURFACE INSPECTION 5-17
5-30. CORROSION INSPECTION 5-18
5-31. ESTABLISHING EDDY CURRENT INSPECTION PROCEDURES 5-18
5-32.–5-39. [RESERVED.] 5-19

SECTION 4. MAGNETIC PARTICLE INSPECTION 5-20

5-40. GENERAL 5-20
5-41. PRINCIPLES OF OPERATION 5-20
5-42. APPLICATIONS 5-21
5-43. ELECTRICAL MAGNETIZING EQUIPMENT 5-21
5-44. MATERIALS USED IN MAGNETIC PARTICLE INSPECTION 5-22
5-45. PREPARATION OF SURFACE 5-24
5-46. METHODS OF EXAMINATION 5-25
5-47. APPLICATION OF MAGNETIC PARTICLES 5-25
5-48. MAGNETIZATION 5-25

5-49. DETERMINATION OF FIELD STRENGTH 5-28
5-50. SPECIAL EXAMINATION TECHNIQUES 5-28
5-51. DEMAGNETIZATION AND POST-EXAMINATION CLEANING 5-30
5-52.–5-59. [RESERVED.] 5-31

SECTION 5. PENETRANT INSPECTION 5-32

5-60. GENERAL 5-32
5-61. EQUIPMENT USED IN THE PENETRANT INSPECTION PROCESS 5-33
5-62. BASIC STEPS TO PERFORM PENETRATION INSPECTION 5-34
5-63. CLEANERS AND APPLICATIONS 5-37
5-64. TECHNICAL STANDARDS 5-38
5-65.–5-72. [RESERVED.] 5-39

SECTION 6. RADIOGRAPHY (X-RAY) INSPECTION 5-40

5-73. GENERAL 5-40
5-74. LIMITATIONS 5-40
5-75. FILM OR PAPER RADIOGRAPHY 5-40
5-76. REAL-TIME RADIOGRAPHY 5-41
5-77. ADVANTAGE OF REAL-TIME RADIOGRAPHY OVER FILM RADIOGRAPHY 5-41
5-78. COMPUTED TOMOGRAPHY (CT) 5-41
5-79. USES OF RADIOGRAPHY 5-41
5-80. COMPARISON WITH OTHER NDI METHODS 5-41
5-81. FLAWS 5-42
5-82. FIELD INSPECTION 5-42
5-83. SAFETY 5-42
5-84.–5-88. [RESERVED.] 5-42

SECTION 7. ULTRASONIC INSPECTION 5-43

5-89. GENERAL 5-43
5-90. SOUND REFLECTION 5-43
5-91. ULTRASONIC INSPECTION TECHNIQUES 5-44
5-92. FLAW DETECTION 5-44
5-93. BASIC EQUIPMENT 5-45
5-94. INSPECTION OF BONDED STRUCTURES 5-47
5-95. BOND TESTING INSTRUMENTS 5-52
5-96. THICKNESS MEASUREMENTS 5-53
5-97. LEAK TESTING 5-54
5-98.–5-104. [RESERVED.] 5-54

SECTION 8. TAP TESTING 5-55

5-105. GENERAL 5-55
5-106.–5-111. [RESERVED.] 5-55

SECTION 9. ACOUSTIC-EMISSION 5-56

5-112. GENERAL 5-56
5-113. APPLICATIONS 5-56
5-114.–5-119. [RESERVED.] 5-56

SECTION 10. THERMOGRAPHY 5-57

5-120. GENERAL 5-57
5-121.–5-126. [RESERVED.] 5-57

SECTION 11. HOLOGRAPHY 5-58

5-127. GENERAL 5-58
5-128.–5-133. [RESERVED.] 5-58

SECTION 12. SHEAROGRAPHY 5-59

5-134. GENERAL 5-59
5-135.–5-140. [RESERVED.] 5-59

CHAPTER 6. CORROSION, INSPECTION, AND PROTECTION 6-1

SECTION 1. GENERAL 6-1

6-1. GENERAL 6-1
6-2. FACTORS INFLUENCING CORROSION 6-2
6-3. COMMON CORROSIVE AGENTS 6-3
6-4. MICRO-ORGANISMS 6-4
6-5.–6-10. [RESERVED.] 6-4

SECTION 2. TYPES OF CORROSION 6-5

6-11. GENERAL 6-5
6-12. GENERAL SURFACE CORROSION 6-5
6-13. PITTING CORROSION 6-5
6-14. CONCENTRATION CELL CORROSION 6-6
6-15. ACTIVE-PASSIVE CELLS 6-7
6-16. FILIFORM CORROSION 6-8
6-17. INTERGRANULAR CORROSION 6-8
6-18. EXFOLIATION CORROSION 6-9
6-19. GALVANIC CORROSION 6-10
6-20. STRESS CORROSION CRACKING 6-10
6-21. FATIGUE CORROSION 6-12
6-22. FRETTING CORROSION 6-12
6-23.–6-28. [RESERVED.] 6-13

SECTION 3. CORROSION PROTECTION MEASURES FOR BASIC MATERIALS 6-14

6-29. GENERAL 6-14
6-30. ANODIZING AND RELATED PROCESSES 6-14
6-31. PLATING 6-14
6-32. PHOSPHATE RUST-PROOFING 6-14
6-33. CHROME-PICKLE TREATMENT 6-14
6-34. DICHROMATE TREATMENT 6-14
6-35. STANNATE IMMERSION TREATMENT 6-15
6-36. GALVANIC ANODIZING TREATMENT 6-15
6-37. CLADDING 6-15
6-38. METAL SPRAYING 6-15
6-39. SHOT-PEENING 6-15
6-40. ORGANIC COATINGS 6-15
6-41. DOPE PROOFING 6-15
6-42. TUBE INTERIORS 6-15
6-43.–6-49. [RESERVED.] 6-15

SECTION 4. CORROSION PREVENTIVE MAINTENANCE 6-16

6-50. GUIDELINES: ALL AIRCRAFT 6-16
6-51. GUIDELINES: AIRCRAFT OPERATING OVER SALTWATER 6-16
6-52.–6-62. [RESERVED.] 6-17

SECTION 5. VISUAL CORROSION INSPECTION GUIDE FOR AIRCRAFT 6-18

6-63. GENERAL 6-18
6-64. EXHAUST TRAIL AREAS 6-18
6-65. BATTERY COMPARTMENTS AND BATTERY VENT OPENINGS 6-18
6-66. LAVATORIES AND GALLEYS 6-18
6-67. BILGE AREAS 6-18
6-68. WHEEL WELLS AND LANDING GEAR 6-18
6-69. EXTERNAL SKIN AREAS 6-18
6-70. WATER ENTRAPMENT AREAS 6-19
6-71. ENGINE FRONTAL AREAS 6-19
6-72. ELECTRONIC PACKAGE COMPARTMENTS 6-19
6-73. FLEXIBLE HOSE ASSEMBLIES 6-19
6-74. SANDWICH PANELS 6-19
6-75. CONTROL CABLES 6-19
6-76. INTEGRAL FUEL CELLS 6-20
6-77. ELECTRICAL CONNECTORS 6-20
6-78.–6-88. [RESERVED.] 6-20

SECTION 6. CORROSION REMOVAL PROCEDURES 6-21

6-89. GENERAL 6-21
6-90. SAFETY PRECAUTIONS 6-21

6-91. CORROSION CONTROL WORK PROCEDURES 6-22
6-92.–6-112. [RESERVED.] 6-23

SECTION 7. BASIC CORROSION REMOVAL TECHNIQUES 6-24

6-113. GENERAL 6-24
6-114. PREPARATIONS FOR REWORK 6-24
6-115. FAIRING OR BLENDING REWORKED AREAS 6-24
6-116. CORROSION REMOVAL BY BLASTING 6-28
6-117. CLEANERS, POLISHES, AND BRIGHTENERS 6-28
6-118. STANDARD METHODS 6-29
6-119.–6-131. [RESERVED.] 6-29

SECTION 8. ALUMINUM AND ALUMINUM ALLOYS 6-30

6-132. GENERAL 6-30
6-133. SPECIAL TREATMENT OF ANODIZED SURFACES 6-30
6-134. REPAIR OF ALUMINUM ALLOY SHEET METAL 6-30
6-135. CORROSION REMOVAL AROUND COUNTERSUNK FASTENERS IN ALUMINUM ALLOY 6-31
6-136. EXAMPLES OF REMOVING CORROSION FROM ALUMINUM AND ALUMINUM ALLOYS 6-31
6-137.–6-147. [RESERVED.] 6-34

SECTION 9. MAGNESIUM AND MAGNESIUM ALLOYS 6-35

6-148. GENERAL 6-35
6-149. TREATMENT OF WROUGHT MAGNESIUM SHEETS AND FORGINGS 6-35
6-150. REPAIR OF MAGNESIUM SHEET METAL AFTER EXTENSIVE CORROSION REMOVAL 6-35
6-151. IN-PLACE TREATMENT OF MAGNESIUM CASTINGS 6-36
6-152. EXAMPLE OF REMOVING CORROSION FROM MAGNESIUM 6-36
6-153.–6-163. [RESERVED.] 6-40

SECTION 10. FERROUS METALS 6-41

6-164. GENERAL 6-41
6-165. SPECIAL TREATMENT OF HIGH-STRENGTH STEEL 6-41
6-166. SPECIAL TREATMENT OF STAINLESS STEEL 6-41
6-167. EXAMPLE OF REMOVING CORROSION FROM FERROUS METALS 6-42
6-168.–6-178. [RESERVED.] 6-42

SECTION 11. OTHER METALS AND ALLOYS 6-43

6-179. NOBLE METAL COATINGS CLEANUP AND RESTORATION 6-43
6-180. COPPER AND COPPER ALLOYS 6-43
6-181. TITANIUM AND TITANIUM ALLOYS 6-43
6-182.–6-192. [RESERVED.] 6-44

SECTION 12. PLATED PARTS 6-45

6-193. CHROMIUM AND NICKEL-PLATED PARTS 6-45
6-194. CADMIUM AND ZINC-PLATED PARTS 6-45
6-195.–6-205. [RESERVED.] 6-45

SECTION 13. CORROSION PROOFING OF LAND PLANES CONVERTED TO SEAPLANES 6-46

6-206. GENERAL 6-46
6-207. NECESSARY MINIMUM PRECAUTIONS 6-46
6-208. RECOMMENDED PRECAUTIONS 6-46
6-209.–6-219. [RESERVED.] 6-47

SECTION 14. HANDLING AND CARE OF AIRCRAFT RECOVERED FROM WATER IMMERSION 6-48

6-220. GENERAL 6-48
6-221. INITIAL FRESHWATER OR DETERGENT WASH 6-48
6-222. RECIPROCATING ENGINES AND PROPELLERS 6-48
6-223. AIRFRAME 6-49
6-224.–6-234. [RESERVED.] 6-49

CHAPTER 7. AIRCRAFT HARDWARE, CONTROL CABLES, AND TURNBUCKLES 7-1

SECTION 1. RIVETS 7-1

7-1. GENERAL 7-1
7-2. MATERIAL APPLICATIONS 7-1
7-3.–7-13. [RESERVED.] 7-2

SECTION 2. SCREWS 7-3

7-14. GENERAL 7-3
7-15. STRUCTURAL SCREWS 7-3
7-16. MACHINE SCREWS 7-3
7-17. PAN HEAD SCREWS (NAS600 THROUGH NAS606, NAS610 THROUGH NAS616, NAS623, AND NAS1402 THROUGH NAS1406) 7-3
7-18. SELF-TAPPING SCREWS 7-4
7-19. WOOD SCREWS 7-4
7-20.–7-33. [RESERVED.] 7-4

SECTION 3. BOLTS 7-5

7-34. GENERAL 7-5
7-35. BOLTS 7-5
7-36. IDENTIFICATION 7-5
7-37. GRIP LENGTH 7-6

7-38. LOCKING OR SAFETYING OF BOLTS 7-6
7-39. BOLT FIT 7-6
7-40. TORQUES 7-7
7-41. STANDARD AIRCRAFT HEX HEAD BOLTS (AN3 THROUGH AN20) 7-10
7-42. DRILLED HEAD BOLTS (AN73 THROUGH AN81) 7-10
7-43. ENGINE BOLTS 7-10
7-44. CLOSE-TOLERANCE BOLTS 7-10
7-45. INTERNAL WRENCHING BOLTS (NAS144 THROUGH NAS158 AND NAS172 THROUGH NAS176) 7-10
7-46. INTERNAL WRENCHING BOLTS (MS20004 THROUGH MS20024) AND SIX HOLE, DRILLED SOCKET HEAD BOLTS (AN148551 THROUGH AN149350) 7-11
7-47. TWELVE-POINT, EXTERNAL WRENCHING BOLTS (NAS624 THROUGH NAS644) 7-11
7-48. CLOSE-TOLERANCE SHEAR BOLTS (NAS464) 7-11
7-49. NAS6200 SERIES BOLTS 7-11
7-50. CLEVIS BOLTS (AN21 THROUGH AN36) 7-11
7-51. EYEBOLTS (AN42 THROUGH AN49) 7-11
7-52.–7-62. [RESERVED.] 7-11

SECTION 4. NUTS 7-12

7-63. GENERAL 7-12
7-64. SELF-LOCKING NUTS 7-12
7-65. NUT IDENTIFICATION FINISHES 7-13
7-66. CASTLE NUT (AN310) 7-14
7-67. CASTELLATED SHEAR NUT (AN320) 7-14
7-68. PLAIN NUT (AN315 AND AN335) 7-14
7-69. LIGHT HEX NUTS (AN340 AND AN345) 7-14
7-70. CHECKNUT (AN316) 7-15
7-71. WINGNUTS (AN350) 7-15
7-72. SHEET SPRING NUTS (AN365) 7-15
7-73.–7-84. RESERVED 7-15

SECTION 5. WASHERS 7-16

7-85. GENERAL 7-16
7-86. PLAIN WASHERS (AN960 AND AN970) 7-16
7-87. LOCK WASHERS (AN935 AND AN936) 7-16
7-88. BALL SOCKET AND SEAT WASHERS (AN950 AND AN955) 7-16
7-89. TAPER PIN WASHERS (AN975) 7-16
7-90.–7-100. [RESERVED.] 7-16

SECTION 6. PINS 7-17

7-101. TAPER PINS 7-17
7-102. FLATHEAD PINS (AN392 THROUGH AN406) 7-17

7-103. COTTER PINS (AN380) 7-17
7-104. SPRING PINS 7-17
7-105. QUICK-RELEASE PINS 7-17
7-106.–7-121. [RESERVED.] 7-17

SECTION 7. SAFETYING 7-18

7-122. GENERAL 7-18
7-123. SAFETY WIRE 7-18
7-124. SAFETY-WIRING PROCEDURES 7-20
7-125. TWISTING WITH SPECIAL TOOLS 7-21
7-126. SECURING OIL CAPS, DRAIN COCKS, AND VALVES 7-21
7-127. SECURING WITH COTTER PINS 7-25
7-128.–7-139. [RESERVED.] 7-26

SECTION 8. INSPECTION AND REPAIR OF CONTROL CABLES AND TURNBUCKLES 7-27

7-140. GENERAL 7-27
7-141. CABLE DEFINITIONS 7-27
7-142. FLEXIBLE CABLES 7-27
7-143. NYLON-COATED CABLES 7-29
7-144. NONFLEXIBLE CABLES 7-30
7-145. CABLE SPECIFICATIONS 7-31
7-146. CABLE PROOF LOADS 7-31
7-147. REPLACEMENT OF CABLES 7-31
7-148. MECHANICALLY-FABRICATED CABLE ASSEMBLIES 7-32
7-149. CABLE SYSTEM INSPECTION 7-39
7-150. CORROSION AND RUST PREVENTION 7-44
7-151. WIRE SPLICES 7-45
7-152. CABLE MAINTENANCE 7-45
7-153. CABLE TENSION ADJUSTMENT 7-45
7-154.–7-164. [RESERVED.] 7-46

SECTION 9. TURNBUCKLES 7-47

7-165. GENERAL 7-47
7-166. TURNBUCKLE INSTALLATION 7-47
7-167. WITNESS HOLE 7-48
7-168.–7-178. [RESERVED.] 7-48

SECTION 10. SAFETY METHODS FOR TURNBUCKLES 7-49

7-179. GENERAL 7-49
7-180. DOUBLE-WRAP METHOD 7-49
7-181. SINGLE-WRAP METHOD 7-50
7-182. SAFETY WIRE SECURED TURNBUCKLES 7-50
7-183. SPECIAL LOCKING DEVICES 7-52

7-184. ASSEMBLING AND SECURING CLIP-LOCKING TURNBUCKLES 7-52
7-185.–7-195. [RESERVED.] 7-53

SECTION 11. HARDWARE IDENTIFICATION TABLES 7-54

7-196.–7-206. [RESERVED.] 7-83

CHAPTER 8. ENGINES, FUEL, EXHAUST, AND PROPELLERS 8-1

SECTION 1. ENGINES 8-1

8-1. GENERAL 8-1
8-2. SPECIAL INSPECTION 8-1
8-3. CRANKSHAFT INSPECTION AND REPAIR REQUIREMENTS 8-3
8-4. REPLACEMENT PARTS IN CERTIFICATED ENGINES 8-4
8-5. OIL SYSTEM LINES INSPECTION 8-4
8-6. OIL FILTER INSPECTION 8-4
8-7. CYLINDER HOLD-DOWN NUTS AND CAP SCREWS 8-4
8-8. REUSE OF SAFETYING DEVICES 8-5
8-9. SELF-LOCKING NUTS FOR AIRCRAFT ENGINES AND ACCESSORIES 8-5
8-10. METALLIZING 8-5
8-11. PLATING 8-5
8-12. CORROSION 8-7
8-13. ENGINE RUN-IN 8-7
8-14. COMPRESSION TESTING OF AIRCRAFT ENGINE CYLINDERS 8-7
8-15. SPARK PLUGS 8-10
8-16. OPERATIONAL PROBLEMS 8-14
8-17. SPARK PLUG PRE-RECONDITIONING INSPECTION 8-19
8-18. IGNITION HARNESSES INSPECTION 8-19
8-19. MAGNETO INSPECTION 8-20
8-20. MAGNETO-TO-ENGINE TIMING 8-22
8-21.–8-29. [RESERVED.] 8-22

SECTION 2. FUEL SYSTEMS 8-23

8-30. GENERAL 8-23
8-31. FUEL LINES AND FITTINGS 8-23
8-32. FUEL TANKS AND CELLS 8-24
8-33. FUEL TANK CAPS, VENTS, AND OVERFLOW LINES 8-25
8-34. FUEL CROSS-FEED, FIREWALL SHUTOFF, AND TANK SELECTOR VALVES 8-25
8-35. FUEL PUMPS 8-26
8-36. FUEL FILTERS, STRAINERS, AND DRAINS 8-26
8-37. INDICATOR SYSTEMS 8-26
8-38. FUEL SYSTEM PRECAUTIONS 8-26
8-39.–8-44. [RESERVED.] 8-27

SECTION 3. EXHAUST SYSTEMS 8-28

8-45. GENERAL 8-28
8-46. MUFFLER/HEAT EXCHANGER FAILURES 8-28
8-47. MANIFOLD/STACK FAILURES 8-30
8-48. INTERNAL MUFFLER FAILURES 8-31
8-49. INSPECTION 8-33
8-50. REPAIRS 8-35
8-51. TURBOSUPERCHARGER 8-36
8-52. AUGMENTER SYSTEMS 8-36
8-53.–8-70. [RESERVED.] 8-36

SECTION 4. REPAIR OF METAL PROPELLERS 8-37

8-71. GENERAL 8-37
8-72. STEEL BLADES 8-37
8-73. ALUMINUM PROPELLER REPAIRS 8-37
8-74. REPAIR LIMITS 8-40
8-75. STEEL HUBS AND HUB PARTS 8-42
8-76. PROPELLER HUB AND FLANGE REPAIR 8-42
8-77. CONTROL SYSTEMS 8-43
8-78. DEICING SYSTEMS 8-44
8-79.–8-90. [RESERVED.] 8-44

SECTION 5. INSPECTION OF PROPELLERS 8-45

8-91. GENERAL 8-45
8-92. WOOD OR COMPOSITION PROPELLERS AND BLADES 8-45
8-93. METAL PROPELLERS AND BLADES 8-47
8-94. PROPELLER HUB 8-48
8-95. TACHOMETER INSPECTION 8-49
8-96.–8-106. [RESERVED.] 8-49

SECTION 6. PROPELLER TRACKING AND VIBRATION 8-50

8-107. GENERAL 8-50
8-108. PROPELLER TRACKING CHECK 8-50
8-109. VIBRATION 8-51
8-110.–8-129. [RESERVED.] 8-51

CHAPTER 9. AIRCRAFT SYSTEMS AND COMPONENTS 9-1

SECTION 1. INSPECTION AND MAINTENANCE OF LANDING GEAR 9-1

9-1. GENERAL 9-1
9-2. GENERAL INSPECTION 9-1
9-3. CLEANING AND LUBRICATING 9-1
9-4. FIXED-GEAR INSPECTION 9-2

9-5. INSPECTION OF RETRACTABLE LANDING GEAR 9-3
9-6. EMERGENCY SYSTEMS 9-4
9-7. LANDING-GEAR COMPONENTS 9-4
9-8. FLOATS AND SKIS 9-6
9-9. INSPECTION AND REPAIR OF FLOATS AND SKIS 9-8
9-10. TYPES OF LANDING-GEAR PROBLEMS 9-9
9-11. SPECIAL INSPECTIONS 9-11
9-12. RETRACTION TESTS 9-11
9-13. TIRE AND TUBE MAINTENANCE 9-11
9-14. TIRE INSPECTION AND REPAIR 9-12
9-15. INFLATION OF TIRES 9-13
9-16. PERSONAL SAFETY 9-14
9-17. DISASSEMBLE THE WHEEL 9-14
9-18. REASSEMBLING THE WHEEL 9-15
9-19. SLIPPAGE 9-15
9-20. WHEEL INSPECTION 9-15
9-21. WHEEL INSTALLATION 9-15
9-22.–9-24. [RESERVED.] 9-16

SECTION 2. HYDRAULIC SYSTEMS 9-17

9-25. GENERAL 9-17
9-26. PURPOSES OF HYDRAULIC SYSTEMS 9-17
9-27. TYPES OF HYDRAULIC FLUID 9-17
9-28. HANDLING HYDRAULIC FLUID 9-18
9-29. HYDRAULIC SYSTEM MAINTENANCE PRACTICES 9-19
9-30. HYDRAULIC LINES AND FITTINGS 9-22
9-31.–9-36. [RESERVED.] 9-34

SECTION 3. EMERGENCY EQUIPMENT 9-35

9-37. LIFE RAFTS 9-35
9-38. LIFE RAFT INSPECTIONS 9-35
9-39. SURVIVAL KIT INSPECTION 9-37
9-40. SPECIAL INSPECTIONS 9-41
9-41. INSPECTION RECORD 9-41
9-42. RAFT REPAIRS 9-41
9-43. LIFE PRESERVERS 9-44
9-44. LIFE PRESERVER INSPECTION 9-45
9-45. REPAIR OF LIFE PRESERVERS 9-46
9-46. MISCELLANEOUS EQUIPMENT 9-46
9-47. OXYGEN SYSTEMS 9-47
9-48. INSPECTION 9-48
9-49. MAINTENANCE 9-49
9-50. FUNCTIONAL TESTING AFTER REPAIR 9-51
9-51. REQUIREMENTS FOR REQUALIFICATION OF OXYGEN CYLINDERS 9-52
9-52.–9-59. [RESERVED.] 9-55

SECTION 4. CABIN INTERIOR 9-56

9-60. GENERAL 9-56
9-61. CAR 3 AIRCRAFT INTERIOR 9-56
9-62. PART 23 AIRCRAFT INTERIOR 9-56
9-63. SOURCE OF INFORMATION 9-57
9-64. UPHOLSTERY AND/OR BELTS 9-57
9-65.–9-70. [RESERVED.] 9-57

CHAPTER 10. WEIGHT AND BALANCE 10-1

SECTION 1. TERMINOLOGY 10-1

10-1. GENERAL 10-1
10-2. TERMINOLOGY 10-1
10-3.–10-13. [RESERVED.] 10-9

SECTION 2. WEIGHING PROCEDURES 10-10

10-14. GENERAL 10-10
10-15. PROCEDURES 10-10
10-16. REPAIRS AND ALTERATIONS 10-11
10-17. ANNUAL OR 100-HOUR INSPECTION 10-11
10-18. W&B COMPUTATIONS 10-12
10-19. W&B EXTREME CONDITIONS 10-13
10-20. LOADING CONDITIONS AND/OR PLACARDS 10-16
10-21. EQUIPMENT LIST 10-19
10-22. EQUIPMENT CHANGE 10-20
10-23. SAMPLE W&B REPORT 10-21
10-24. INSTALLATION OF BALLAST 10-24
10-25. LOADING SCHEDULE 10-25
10-26.–10-34. [RESERVED.] 10-25

CHAPTER 11. AIRCRAFT ELECTRICAL SYSTEMS 11-1

SECTION 1. INSPECTION AND CARE OF ELECTRICAL SYSTEMS 11-1

11-1. GENERAL 11-1
11-2. INSPECTION AND OPERATION CHECKS 11-1
11-3. FUNCTIONAL CHECK OF STAND-BY OR EMERGENCY EQUIPMENT 11-2
11-4. CLEANING AND PRESERVATION 11-2
11-5. BATTERY ELECTROLYTE CORROSION 11-2
11-6. ADJUSTMENT AND REPAIR 11-2
11-7. INSULATION OF ELECTRICAL EQUIPMENT 11-3
11-8. BUS BARS 11-3
11-9. ASTM INTERNATIONAL 11-3
11-10.–11-14. [RESERVED.] 11-4

SECTION 2. STORAGE BATTERIES 11-5

11-15. GENERAL 11-5
11-16. BATTERY CHARGING 11-5
11-17. BATTERY FREEZING 11-5
11-18. TEMPERATURE CORRECTION 11-6
11-19. BATTERY MAINTENANCE 11-7
11-20. ELECTROLYTE SPILLAGE 11-10
11-21. NOXIOUS FUMES 11-10
11-22. INSTALLATION PRACTICES 11-10
11-23.–11-29. [RESERVED.] 11-12

SECTION 3. INSPECTION OF EQUIPMENT INSTALLATION 11-13

11-30. GENERAL 11-13
11-31. INSTALLATION CLEARANCE PROVISIONS 11-13
11-32. WIRES, WIRE BUNDLES, AND CIRCUIT PROTECTIVE DEVICES 11-13
11-33. ALTERNATOR DIODES 11-13
11-34. STATIC ELECTRICAL POWER CONVERTERS 11-13
11-35. ACCEPTABLE MEANS OF CONTROLLING OR MONITORING THE ELECTRICAL LOAD 11-14
11-36. ELECTRICAL LOAD DETERMINATION 11-14
11-37. JUNCTION BOX CONSTRUCTION 11-15
11-38.–11-46. [RESERVED.] 11-15

SECTION 4. INSPECTION OF CIRCUIT-PROTECTION DEVICES 11-16

11-47. GENERAL 11-16
11-48. DETERMINATION OF CIRCUIT BREAKER RATINGS 11-16
11-49. DC CIRCUIT PROTECTOR CHART 11-16
11-50. RESETTABLE CIRCUIT PROTECTION DEVICES 11-17
11-51. CIRCUIT BREAKER USAGE 11-17
11-52. CIRCUIT BREAKER MAINTENANCE 11-18
11-53. SWITCHES 11-18
11-54. RELAYS 11-22
11-55. LOAD CONSIDERATIONS 11-23
11-56. OPERATING CONDITIONS FOR SWITCHES AND RELAYS 11-23
11-57.–11-65. [RESERVED.] 11-23

SECTION 5. ELECTRICAL WIRE RATING 11-24

11-66. GENERAL 11-24
11-67. METHODS FOR DETERMINING CURRENT CARRYING CAPACITY OF WIRES 11-28
11-68. INSTRUCTIONS FOR USE OF ELECTRICAL WIRE CHART 11-29
11-69. COMPUTING CURRENT CARRYING CAPACITY 11-33
11-70.–11-75. [RESERVED.] 11-40

SECTION 6. AIRCRAFT ELECTRICAL WIRE SELECTION 11-41

11-76. GENERAL 11-41
11-77. AIRCRAFT WIRE MATERIALS 11-41
11-78. SUBSTITUTIONS 11-43
11-79.–11-84. [RESERVED.] 11-43

SECTION 7. TABLE OF ACCEPTABLE WIRES 11-44

11-85. AIRCRAFT WIRE TABLE 11-44
11-86. OPEN AIRFRAME INTERCONNECTING WIRE 11-47
11-87. PROTECTED WIRE 11-47
11-88. SEVERE WIND AND MOISTURE PROBLEMS (SWAMP) 11-47
11-89. SHIELDED WIRE 11-47
11-90.–11-95. [RESERVED.] 11-48

SECTION 8. WIRING INSTALLATION INSPECTION REQUIREMENTS 11-49

11-96. GENERAL 11-49
11-97. WIRING REPLACEMENT 11-52
11-98. TERMINALS AND TERMINAL BLOCKS 11-53
11-99. FUSES AND FUSE HOLDERS 11-53
11-100. CONNECTORS 11-54
11-101. JUNCTION BOXES, PANELS, SHIELDS, AND MICRO-SWITCH HOUSINGS 11-55
11-102. RIGID METALLIC, FLEXIBLE METALLIC AND RIGID NONMETALLIC CONDUIT 11-55
11-103. JUNCTIONS 11-55
11-104. CIRCUIT BREAKERS 11-56
11-105. SYSTEM SEPARATION 11-56
11-106. ELECTROMAGNETIC INTERFERENCE (EMI) 11-56
11-107. INTERFERENCE TESTS 11-56
11-108. IDENTIFICATION STENCILS AND PLACARDS ON ELECTRICAL EQUIPMENT 11-57
11-109.–11-114. [RESERVED.] 11-57

SECTION 9. ENVIRONMENTAL PROTECTION AND INSPECTION 11-58

11-115. MAINTENANCE AND OPERATIONS 11-58
11-116. GROUP AND BUNDLE TIES 11-58
11-117. MINIMUM WIRE BEND RADII 11-59
11-118. SLACK 11-59
11-119. DRIP LOOP IN WIRE BUNDLE 11-60
11-120. POWER FEEDERS 11-61
11-121. RF CABLE 11-61
11-122. PRECAUTIONS 11-61

11-123. MOISTURE PROTECTION, WHEEL WELLS, AND LANDING GEAR AREAS 11-62
11-124. PROTECTION AGAINST PERSONNEL AND CARGO 11-62
11-125. HEAT PRECAUTIONS 11-62
11-126. MOVABLE CONTROLS WIRING PRECAUTIONS 11-62
11-127. FLAMMABLE FLUIDS AND GASES 11-62
11-128.–11-134. [RESERVED.] 11-63

SECTION 10. SERVICE LOOP HARNESSES (PLASTIC TIE STRIPS) 11-64

11-135. GENERAL 11-64
11-136. SUPPORT 11-64
11-137. ANTI-CHAFING MATERIAL 11-64
11-138. STRAIN RELIEF 11-64
11-139. “SERVICE LOOP” 11-64
11-140.–11-145. [RESERVED.] 11-65

SECTION 11. CLAMPING 11-66

11-146. GENERAL 11-66
11-147. WIRE AND CABLE CLAMPS INSPECTION 11-66
11-148.–11-154. [RESERVED.] 11-69

SECTION 12. WIRE INSULATION AND LACING STRING TIE 11-70

11-155. GENERAL 11-70
11-156. INSULATION MATERIALS 11-70
11-157. STRIPPING INSULATION 11-70
11-158. LACING AND TIES 11-71
11-159. INSULATION TAPE 11-74
11-160.–11-166. [RESERVED.] 11-74

SECTION 13. SPLICING 11-75

11-167. GENERAL 11-75
11-168.–11-173. [RESERVED.] 11-75

SECTION 14. TERMINAL REPAIRS 11-76

11-174. GENERAL 11-76
11-175. ATTACHMENT OF TERMINALS TO STUDS 11-77
11-176. STUDS AND INSULATORS 11-77
11-177. WIRE TERMINALS AND BINDING POSTS 11-78
11-178. CRIMP ON TERMINAL LUGS AND SPLICES (pre-insulated crimp type) 11-78
11-179. LOCK WASHERS FOR TERMINALS ON EQUIPMENT 11-79
11-180.–11-184. [RESERVED.] 11-79

SECTION 15. GROUNDING AND BONDING 11-80

11-185. GENERAL 11-80
11-186. GROUNDING 11-80
11-187. BONDING 11-82
11-188. BONDING INSPECTION 11-82
11-189. BONDING JUMPER INSTALLATIONS 11-84
11-190. CREEPAGE DISTANCE 11-89
11-191. FUEL SYSTEMS 11-89
11-192. ELECTRIC SHOCK PREVENTION BONDING 11-89
11-193. LIGHTNING PROTECTION BONDING 11-89
11-194. LIGHTNING PROTECTION FOR ANTENNAS AND AIR DATA PROBES . 11-90
11-195. STATIC-DISCHARGE DEVICE 11-90
11-196. CLEANING 11-90
11-197. HARDWARE ASSEMBLY 11-90
11-198.–11-204. [RESERVED.] 11-91

SECTION 16. WIRE MARKING 11-92

11-205. GENERAL 11-92
11-206. WIRE IDENTIFICATION 11-92
11-207. IDENTIFICATION AND INFORMATION RELATED TO THE WIRE AND WIRING DIAGRAMS 11-92
11-208. PLACEMENT OF IDENTIFICATION MARKINGS 11-92
11-209. TYPES OF WIRE MARKINGS 11-93
11-210. HOT STAMP MARKING 11-94
11-211. DOT MATRIX MARKING 11-94
11-212. INK JET MARKING 11-94
11-213. LASER MARKING 11-95
11-214. IDENTIFICATION SLEEVES 11-95
11-215. IDENTIFICATION TAPE 11-95
11-216. OPERATING CONDITIONS 11-96
11-217. INSTALLATION OF PRINTED SLEEVES 11-96
11-218. IDENTIFICATION OF WIRE BUNDLES AND HARNESSES 11-96
11-219. TERMINAL MARKING SLEEVE AND TAGS 11-97
11-220. SLEEVES AND CABLE MARKERS SELECTION 11-98
11-221. TEMPORARY WIRE AND CABLE MARKING PROCEDURE 11-103
11-222. MARKER SLEEVE INSTALLATION AFTER PRINTING 11-103
11-223.–11-229. [RESERVED.] 11-104

SECTION 17. CONNECTORS 11-105

11-230. GENERAL 11-105
11-231. SELECTION 11-105
11-232. TYPES OF CONNECTORS 11-105
11-233. VOLTAGE AND CURRENT RATING 11-111
11-234. SPARE CONTACTS (FUTURE WIRING) 11-111

11-235. INSTALLATION 11-112
11-236. FEED-THROUGH BULKHEAD WIRE PROTECTION 11-113
11-237. SPECIAL PURPOSE CONNECTOR 11-113
11-238. POTTING COMPOUNDS 11-113
11-239. POTTING CONNECTORS 11-113
11-240. THROUGH BOLTS 11-114
11-241.–11-247. [RESERVED.] 11-114

SECTION 18. CONDUITS 11-115

11-248. GENERAL 11-115
11-249. SIZE OF CONDUIT 11-115
11-250. CONDUIT FITTINGS 11-115
11-251. CONDUIT INSTALLATION 11-115
11-252. RIGID CONDUIT 11-115
11-253. FLEXIBLE CONDUIT 11-116
11-254.–11-259. [RESERVED.] 11-117

SECTION 19. UNUSED CONNECTORS AND UNUSED WIRES 11-118

11-260. GENERAL 11-118
11-261. QUICK REFERENCE CHART 11-118
11-262. UNPRESSURIZED AREA CONNECTORS 11-118
11-263. PRESSURIZED AREAS 11-120
11-264.–11-270. [RESERVED.] 11-120

SECTION 20. ELECTRICAL AND ELECTRONIC SYMBOLS 11-121

11-271. GENERAL 11-121
11-272. SYMBOLS 11-121
11-273.–11-283. [RESERVED.] 11-134

CHAPTER 12. AIRCRAFT AVIONICS SYSTEMS 12-1

SECTION 1. AVIONICS EQUIPMENT MAINTENANCE 12-1

12-1. GENERAL 12-1
12-2. HANDLING OF COMPONENTS 12-1
12-3.–12-7. [RESERVED.] 12-1

SECTION 2. GROUND OPERATIONAL CHECKS FOR AVIONICS EQUIPMENT (ELECTRICAL) 12-2

12-8. GENERAL 12-2
12-9. INSPECTION OF AVIONICS SYSTEMS 12-2
12-10. COMMUNICATION SYSTEMS 12-4
12-11. VHF OMNI-DIRECTIONAL RANGE (VOR) 12-4
12-12. DISTANCE MEASURING EQUIPMENT (DME) 12-4

12-13. AUTOMATIC DIRECTION FINDER (ADF) 12-5
12-14. INSTRUMENT LANDING SYSTEMS (ILS) 12-5
12-15. MARKER BEACON 12-6
12-16. LONG RANGE NAVIGATION (LORAN) 12-6
12-17. GLOBAL POSITIONING SYSTEM (GPS) 12-6
12-18. AUTOPILOT SYSTEMS 12-6
12-19. ALTIMETERS 12-7
12-20. TRANSPONDERS 12-7
12-21. AUTOMATIC DEPENDENT SURVEILLANCE-BROADCAST (ADS-B) 12-8
12-22. EMERGENCY LOCATOR TRANSMITTERS (ELT) 12-8
12-23. INSPECTION OF ELT 12-8
12-24. FLIGHT DATA RECORDER (FDR) 12-9
12-25. COCKPIT VOICE RECORDERS (CVR) 12-10
12-26. WEATHER RADAR 12-11
12-27. RADOME INSPECTION 12-11
12-28. DATABUS 12-11
12-29. ELECTRIC COMPATIBILITY 12-11
12-30.–12-36. [RESERVED.] 12-12

SECTION 3. GROUND OPERATIONAL CHECKS FOR AVIONICS EQUIPMENT (NON-ELECTRICAL) 12-13

12-37. COMPASS SWING 12-13
12-38. PNEUMATIC GYROS 12-15
12-39.–12-50. [RESERVED.] 12-18

SECTION 4. PITOT/STATIC SYSTEMS 12-19

12-51. GENERAL 12-19
12-52. SYSTEM COMPONENTS 12-19
12-53. PITOT/STATIC TUBES AND LINES 12-19
12-54. STATIC PORTS AND VENTS 12-20
12-55. HEATER ELEMENTS 12-20
12-56. SYSTEM INSPECTION 12-21
12-57. SYSTEM LEAK TEST 12-21
12-58. STATIC SYSTEM TESTS 12-21
12-59. TEST PITOT SYSTEM 12-22
12-60. MAINTENANCE PRECAUTIONS 12-22
12-61. REPLACING LINES 12-23
12-62. RELOCATION OF PITOT TUBE 12-23
12-63. TROUBLESHOOTING THE PITOT/STATIC PRESSURE SYSTEM 12-23
12-64.–12-69. [RESERVED.] 12-24

SECTION 5. AVIONICS TEST EQUIPMENT 12-25

12-70. GENERAL 12-25
12-71. TEST EQUIPMENT CALIBRATION STANDARDS 12-25

12-72.–12-83. [RESERVED.] 12-26

CHAPTER 13. HUMAN FACTORS 13-1

13-1. HUMAN FACTORS INFLUENCE ON MECHANIC'S PERFORMANCE 13-1
13-2. THE FAA AVIATION SAFETY PROGRAM 13-1

APPENDIX 1. GLOSSARY 1
APPENDIX 2. ACRONYMS AND ABBREVIATIONS 1
APPENDIX 3. METRIC-BASED PREFIXES AND POWERS OF 10 1

LIST OF FIGURES

Figure 1-1. Relative shrinkage of wood members due to drying 1-5
Figure 1-2. Tapering of faceplate 1-5
Figure 1-3. Likely areas to incur structural damage 1-15
Figure 1-4. Consideration of grain direction when making scarf joints 1-17
Figure 1-5. Method of splicing solid or laminated rectangular spars 1-18
Figure 1-6. Method of splicing solid "I" spars 1-19
Figure 1-7. Repairs to built-up "I" spar 1-20
Figure 1-8. Method of splicing box spar flanges (plate method) 1-21
Figure 1-9. Method of splicing box spar webs 1-22
Figure 1-10. Method of reinforcing a longitudinal crack and/or local damage in a solid spar 1-24
Figure 1-11. Repair of wood ribs 1-26
Figure 1-12. Typical wing compression rib repairs 1-28
Figure 1-13. Splayed patch 1-30
Figure 1-14. Surface patches 1-32
Figure 1-15. Scarf patches (back of skin accessible) 1-33
Figure 1-16. Scarf patches (back of skin not accessible) 1-34
Figure 1-17. Oval plug patch assembly 1-36
Figure 1-18. Round plug patch assembly 1-37
Figure 2-1. Fabric seams 2-7
Figure 2-2. Typical methods of attaching fabric 2-8
Figure 2-3. Exploded side view of rib 2-11
Figure 2-4. Standard external modified seine knot used for single and double rib lacing 2-12
Figure 2-5. Starting stitch for rib lacing 2-13
Figure 2-6. Standard single-loop lacing 2-14
Figure 2-7. Standard knot for double-loop lacing 2-15
Figure 2-8. Standard double-loop lacing (optional) 2-16
Figure 2-9a. Alternate sequence to tie a modified seine knot for rib lacing 2-17
Figure 2-9b. Alternate sequence to tie a modified seine knot for rib lacing 2-18
Figure 2-9c. Alternate sequence to tie a modified seine knot for rib lacing 2-19
Figure 2-10. Splice knot 2-20
Figure 2-11. Blindstitch lacing square knot secured with half hitches 2-21
Figure 2-12. Fabric attachment spacing 2-23

FIGURE 1-1. RELATIVE SHRINKAGE OF WOOD MEMBERS DUE TO DRYING

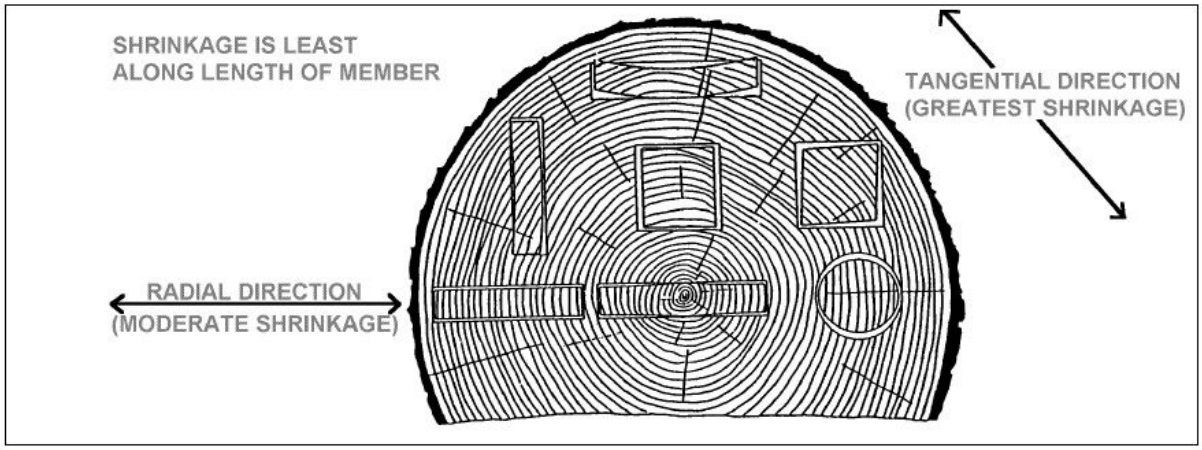

FIGURE 1-2. TAPERING OF FACEPLATE

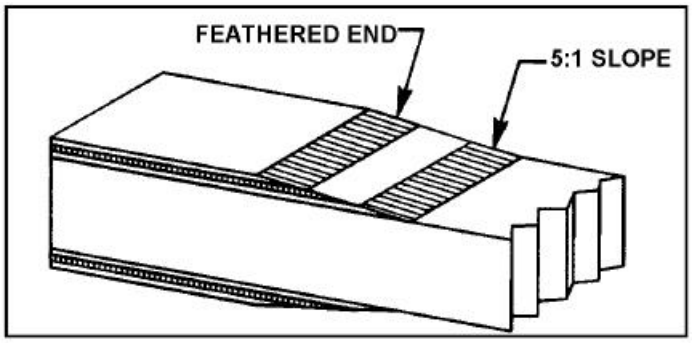

1-3. MODIFIED WOOD PRODUCTS. The most common forms of modified woods found in aircraft construction are plywood. Although not a wood product, Phenolic parts are sometimes incorporated into structures. These products are used whenever the manufacturer requires specialized strength or durability characteristics.

1-4. ADHESIVES. Because of the critical role played by adhesives in aircraft structure, the mechanic must employ only those types of adhesives that meet all of the performance requirements necessary for use in certificated civil aircraft. Use each product strictly in accordance with the aircraft and adhesive manufacturer's instructions.

a. Adhesives acceptable to the FAA can be identified in the following ways:

(1) Refer to the aircraft maintenance or repair manual for specific instructions on acceptable adhesive selection for use on that type aircraft.

(2) Adhesives meeting the requirements of a Military Specification (MIL-SPEC), Aerospace Material Specification (AMS), or Technical Standard Order (TSO) for wooden aircraft structures are satisfactory providing they are found to be compatible with existing structural materials in the aircraft and the fabrication methods to be used in the repair.

reinforcement plate should not overlap drag strut fittings, except when it does not require sufficient shortening of compression struts or changes in drag-truss geometry, to prevent adjustment for proper rigging. Even though take up is sufficient, it may be necessary to change the angles on the fittings. (Acceptable methods for splicing the various types of spars are shown in Figure 1-4 through Figure 1-9.) Reinforcement plates must be used as indicated on all scarf repairs to spars and the slopes of scarves shown are minimum slopes.

FIGURE 1-5. METHOD OF SPLICING SOLID OR LAMINATED RECTANGULAR SPARS

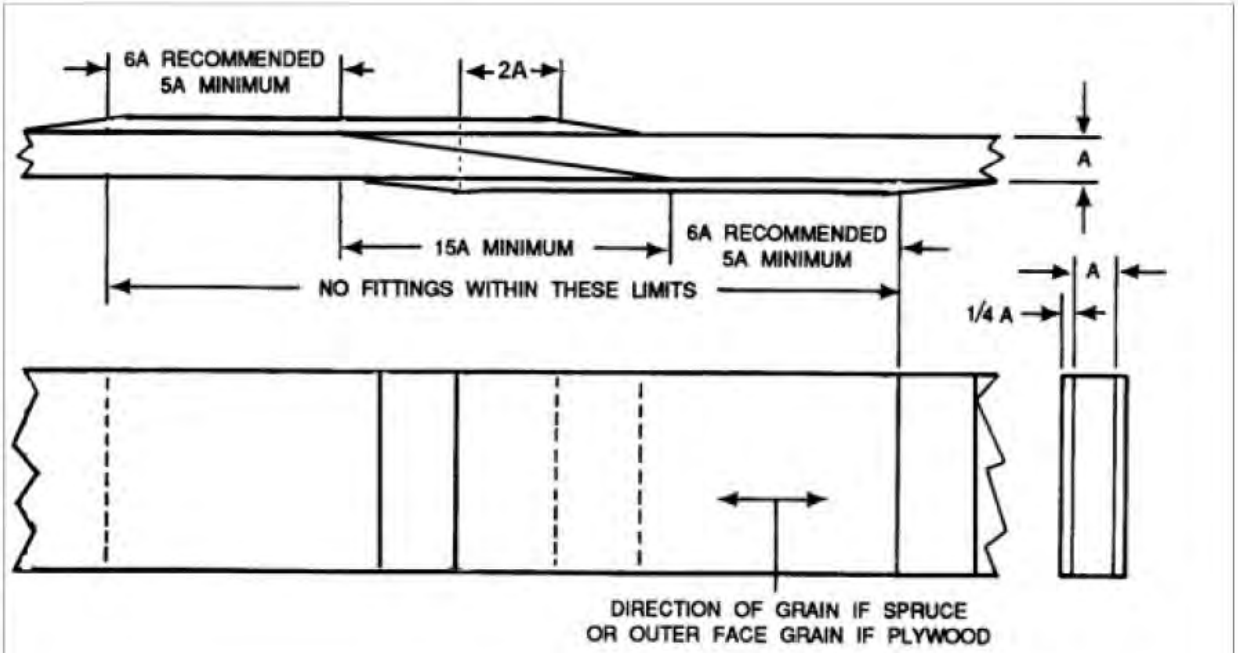

Reinforcement plates to be spruce or plywood and should be bonded only, with the ends feathered off at 5:1 slope as depicted in Figure 1-2. Solid spars may be replaced with laminated spars or vice versa, provided the material is of the same high quality.

FIGURE 5-21. EXAMPLES OF BONDED STRUCTURE CONFIGURATIONS AND SUGGESTED INSPECTION COVERAGE

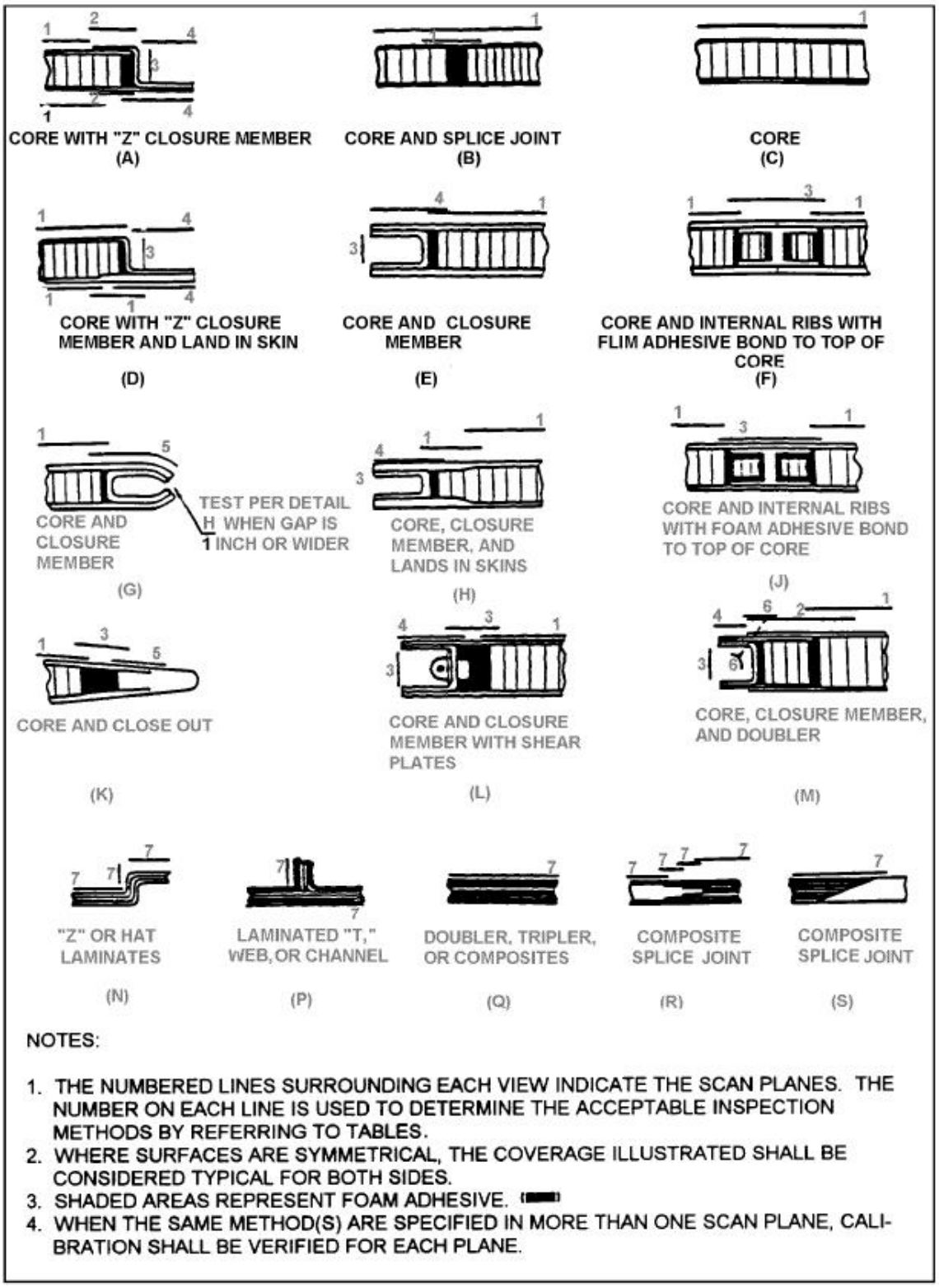

NOTES:

1. THE NUMBERED LINES SURROUNDING EACH VIEW INDICATE THE SCAN PLANES. THE NUMBER ON EACH LINE IS USED TO DETERMINE THE ACCEPTABLE INSPECTION METHODS BY REFERRING TO TABLES.
2. WHERE SURFACES ARE SYMMETRICAL, THE COVERAGE ILLUSTRATED SHALL BE CONSIDERED TYPICAL FOR BOTH SIDES.
3. SHADED AREAS REPRESENT FOAM ADHESIVE.
4. WHEN THE SAME METHOD(S) ARE SPECIFIED IN MORE THAN ONE SCAN PLANE, CALIBRATION SHALL BE VERIFIED FOR EACH PLANE.

how the normal contact point will look when surfaces are separated for inspection. Minor irregularities or roughness of point surfaces are not harmful (see Figure 8-10), neither are small pits or mounds, if not too pronounced. If there is a possibility of the pit becoming deep enough to penetrate the pad (see Figure 8-11), reject the contact assembly.

FIGURE 8-9. NORMAL CONTACT POINT

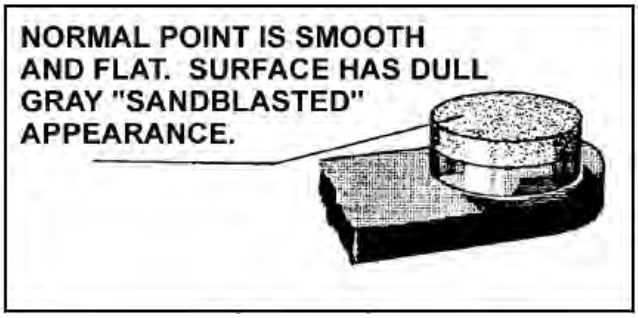

FIGURE 8-10. POINT WITH MINOR IRREGULARITIES

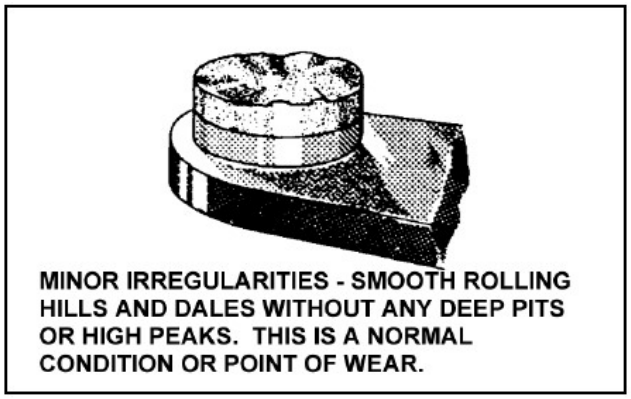

FIGURE 8-11. POINT WITH WELL-DEFINED MOUND

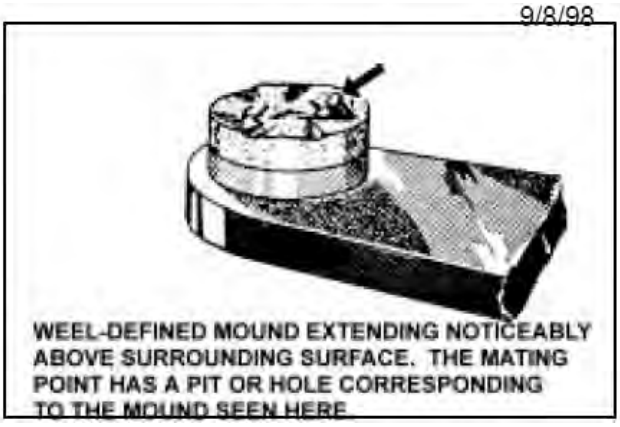

h. Generally, no attempt should be made to dress or stone contact point assemblies; however, if provided, procedures and limits contained in the manufacturer's manuals may be followed.

FIGURE 12-3. INSTRUMENT VACUUM SYSTEM USING A DRY-TYPE AIR PUMP

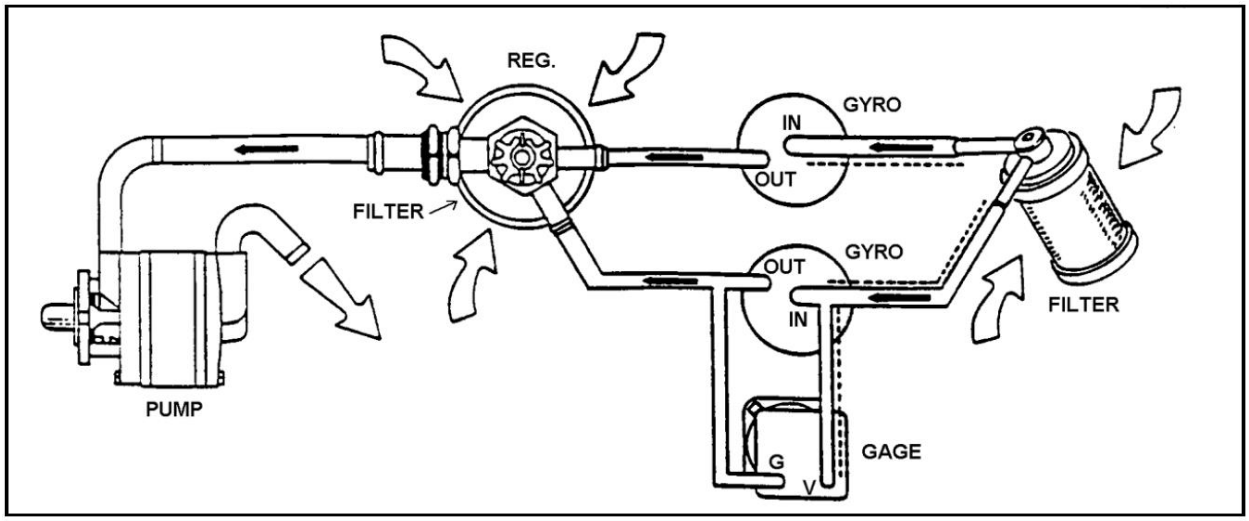

FIGURE 12-4. INSTRUMENT PRESSURE SYSTEM USING A DRY-TYPE AIR PUMP

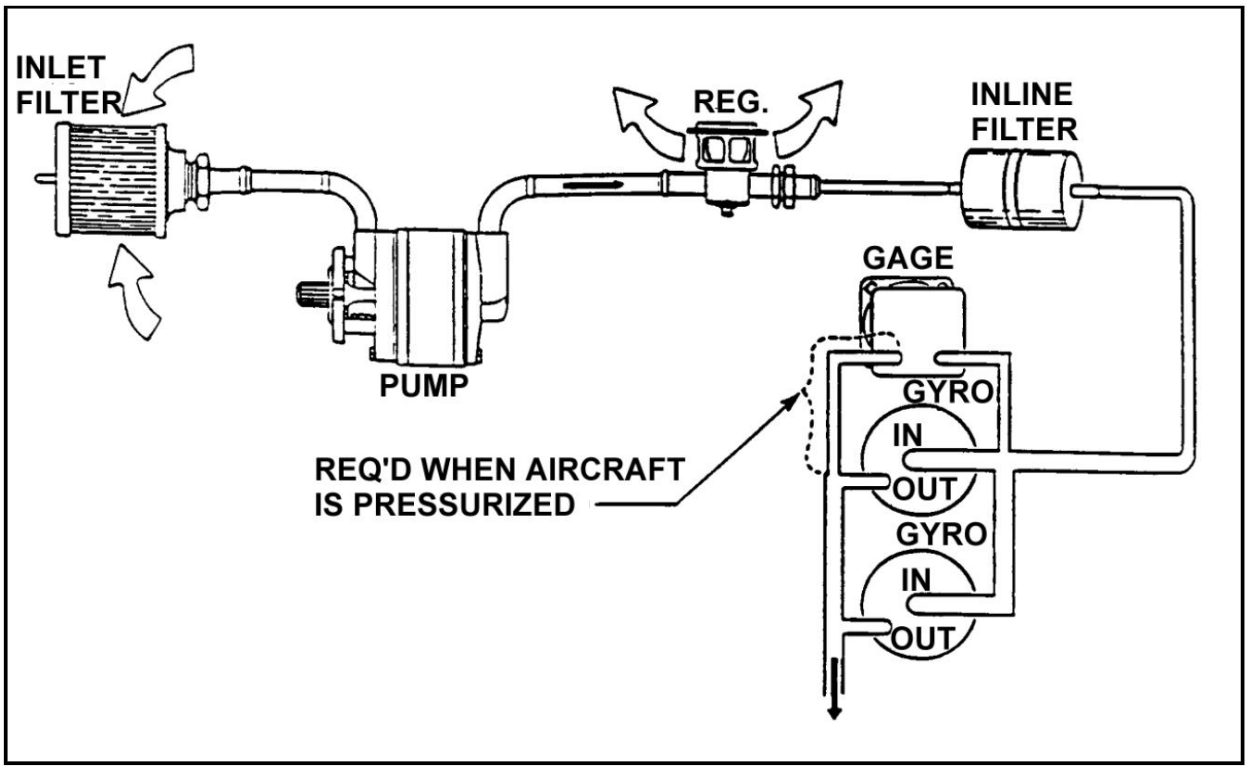

12-39.–12-50. [RESERVED.]